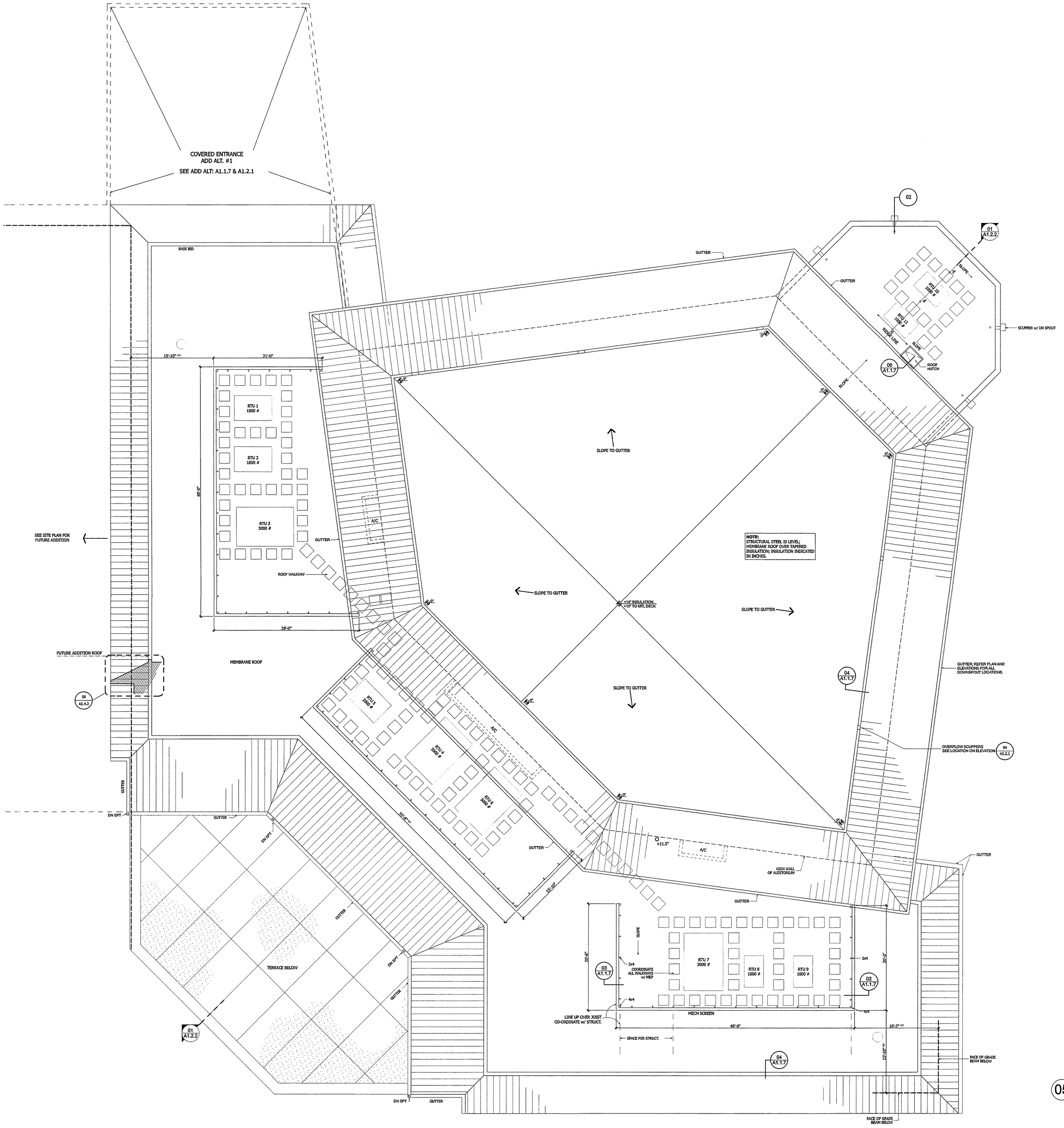

01 ROOF PLAN
SCALE: 1/8" = 1'-0"

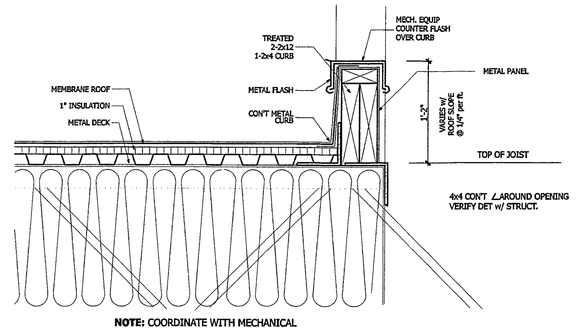

NOTE: COORDINATE WITH MECHANICAL

02 TYP ROOF CURB FOR A/C EQUIP.
SCALE: 1" = 1'-0"

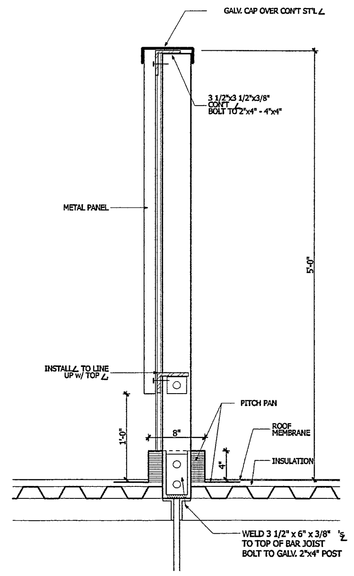

03 MECH. EQUIPMENT SCREEN
SCALE: 1" = 1'-0"

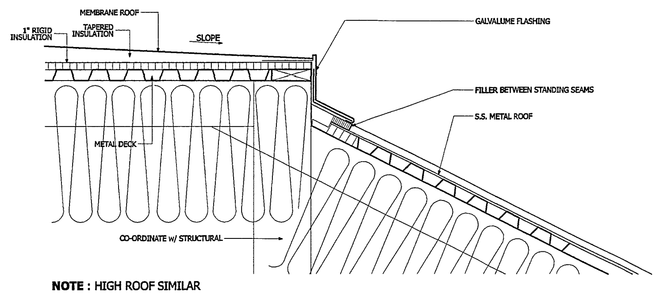

NOTE : HIGH ROOF SIMILAR

04 FLASHING @ LOW ROOF
SCALE: 1" = 1'-0"

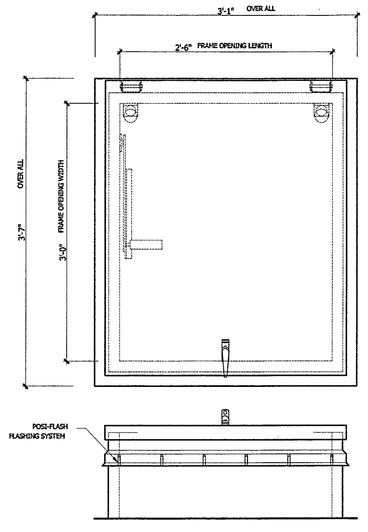

05 ROOF HATCH PLAN
SCALE: 1" = 1'-0"

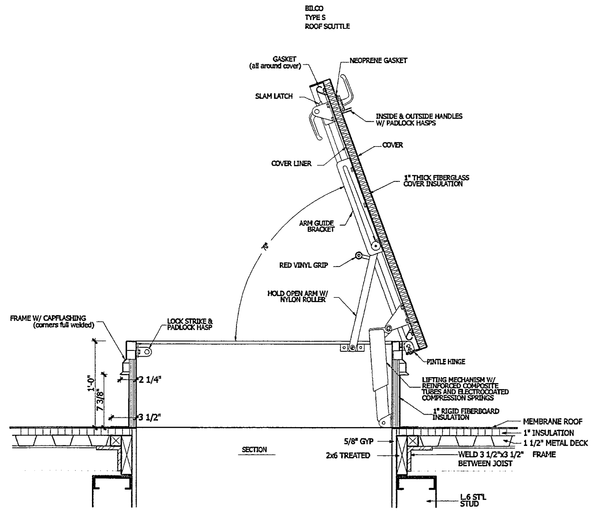

06 ROOF HATCH SECT.
SCALE: 1" = 1'-0"

© Copyright 2008 By Hallum Architects, Inc. - ALL RIGHTS RESERVED

REGISTERED ARCHITECT
BUDDY GOLDSTON
3426
STATE OF TEXAS
5-13-09

Revisions:	By:

HALLUM ARCHITECTS, INC.
6040 CAMP BOWIE BLVD SUITE 17
FORT WORTH, TEXAS 76116
PHONE: 817.332.2422 FAX: 817.338.1949
email: info@hallumarch.com

NEW WORSHIP FACILITIES

EAST SIDE CHURCH of CHRIST

MLK @ HWY 183, AUSTIN, TEXAS

AUDITORIUM
ROOF PLAN

Date: 5-13-09
Scale: 1/8" = 1'-0"
Drawn:
Job: 2006-05
Sheet Number:
A1.1.7