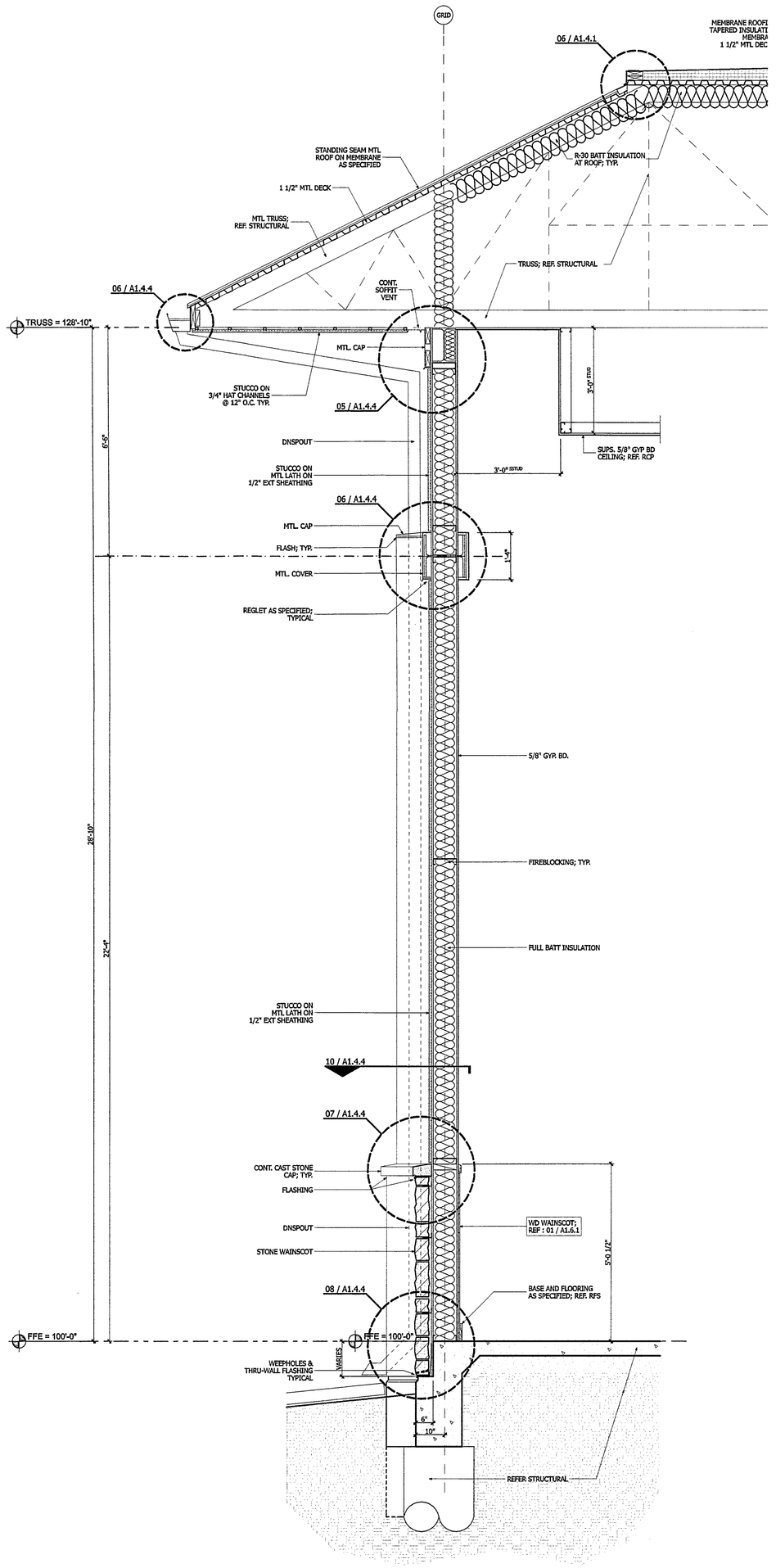

01 WALL SECTION - AUDITORIUM
SCALE: 1/2" = 1'-0"

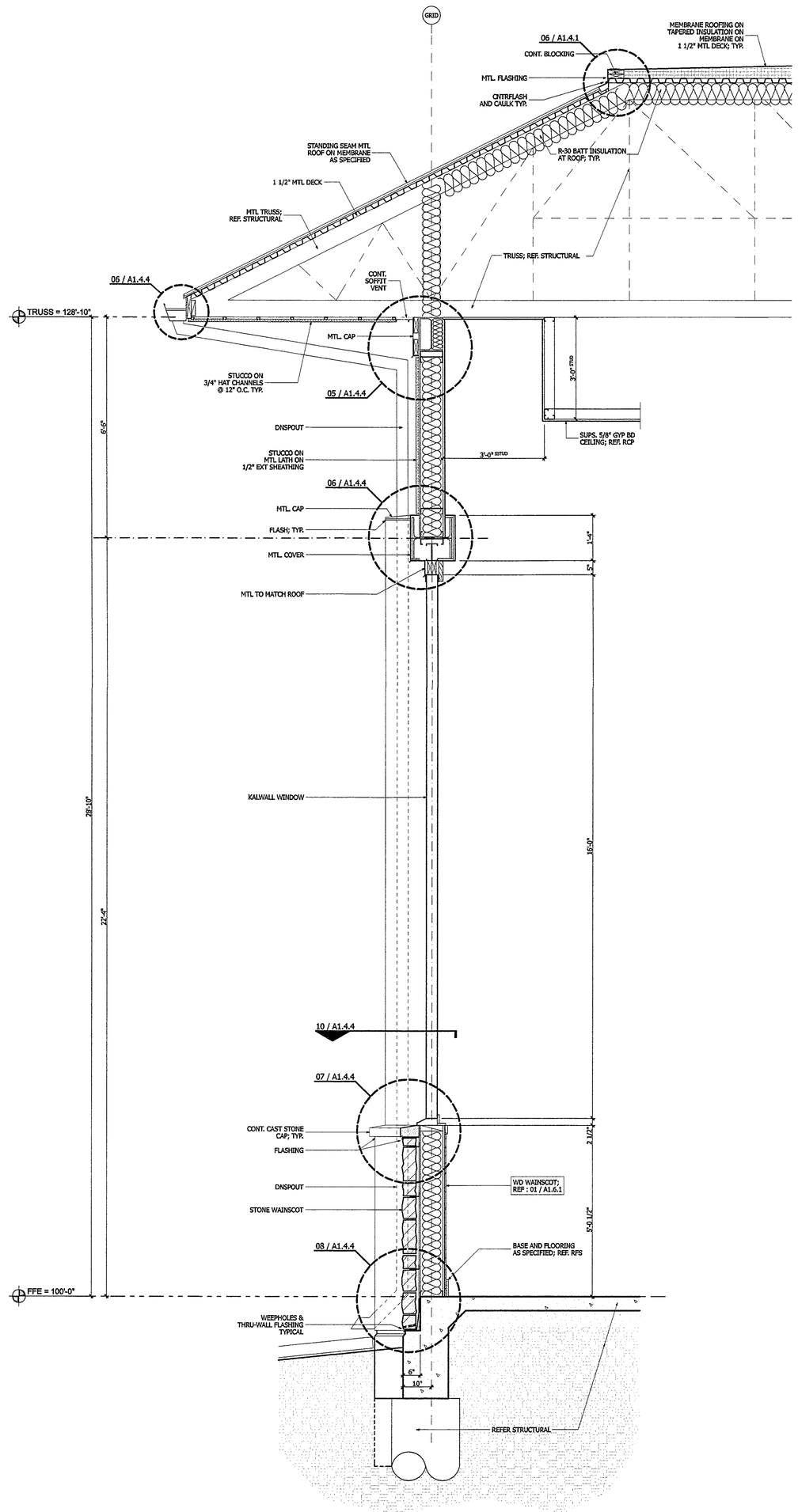

02 WALL SECTION - AUDITORIUM WINDOW
SCALE: 1/2" = 1'-0"

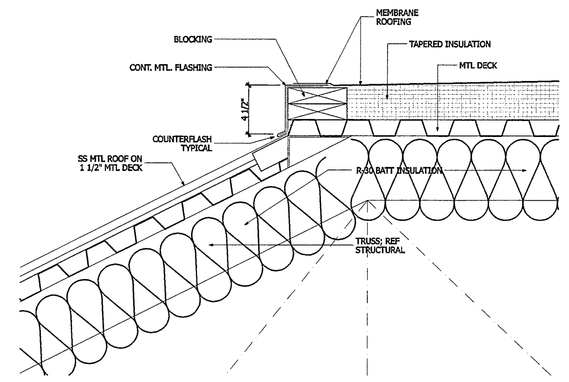

06 ROOF DETAIL @ SS MTL
SCALE: 1 1/2" = 1'-0"

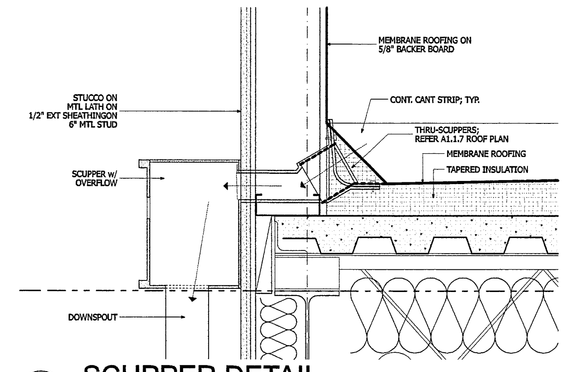

08 SCUPPER DETAIL
SCALE: 1 1/2" = 1'-0"

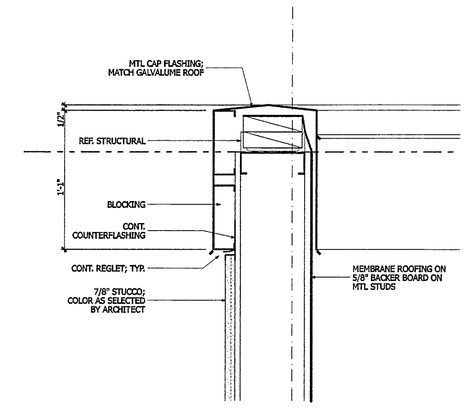

07 CAP DETAIL
SCALE: 1 1/2" = 1'-0"

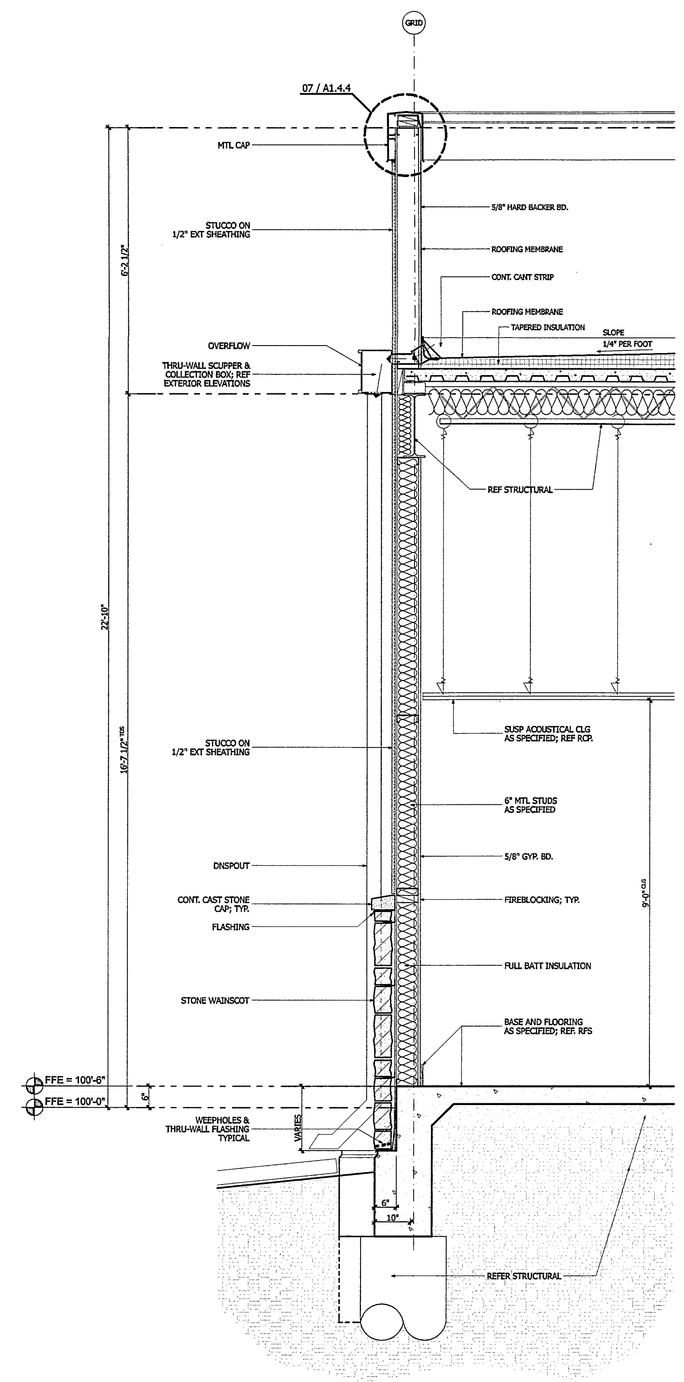

03 WALL SECTION - COUNSEL HALLWAY
SCALE: 1/2" = 1'-0"

© Copyright 2008 By Hallum Architects, Inc. - ALL RIGHTS RESERVED

REGISTERED ARCHITECT HALLUM 2435 STATE OF TEXAS

Revisions:	By:

HALLUM ARCHITECTS, INC.
6040 CAMP BOWIE BLVD SUITE 17
FORT WORTH, TEXAS 76116
PHONE: 817.332.2422 FAX: 817.338.1949
email: info@hallumarch.com

NEW WORSHIP FACILITIES

EAST SIDE CHURCH of CHRIST

MLK @ HWY 183, AUSTIN, TEXAS

AUDITORIUM WALL SECTIONS

Date: 5-13-08
Scale: 1/2" = 1'-0"
Drawn:
Job: 2006-05
Sheet Number:
A1.4.1