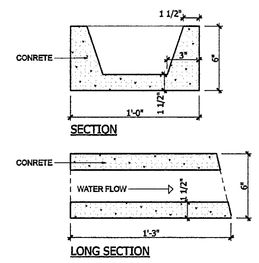

08 CONC SCUPPER
SCALE: 1 1/2"= 1'-0"

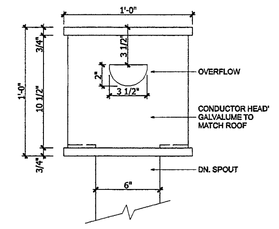

09 MTL CONDUCTOR HD
SCALE: 1 1/2"= 1'-0"

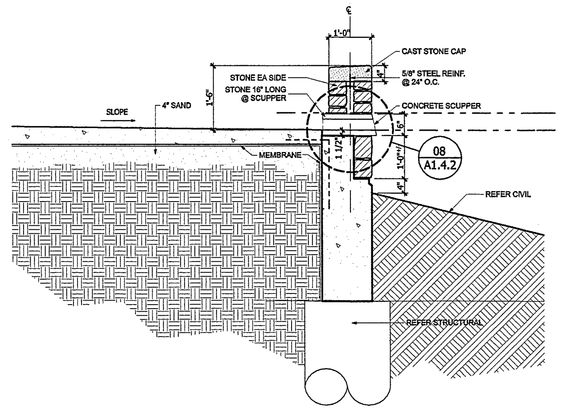

05 WALL SECTION - TERRACE WALL
SCALE: 1/2" = 1'-0"

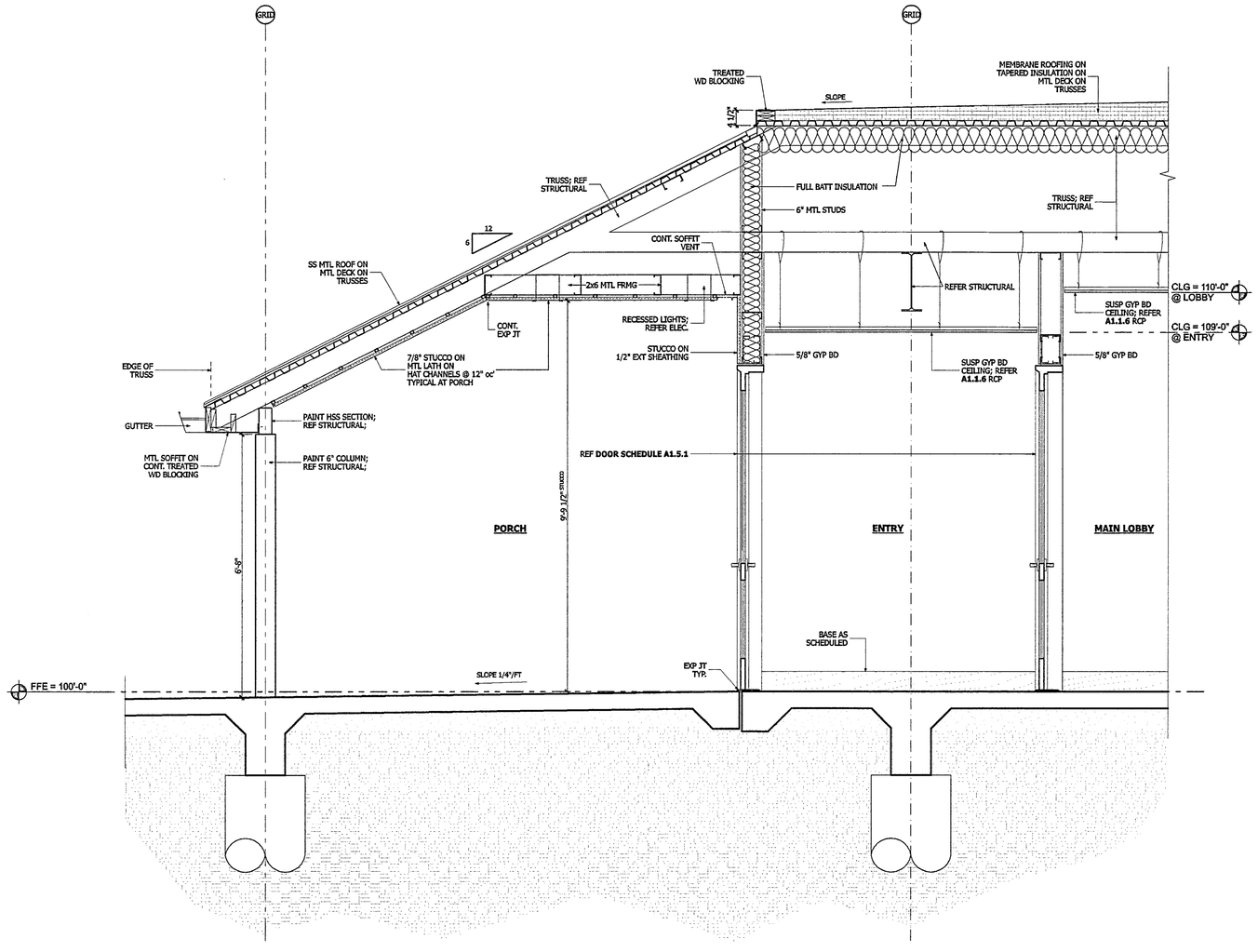

06 WALL SECTION - LOBBY ENTRANCE
SCALE: 1/2" = 1'-0"

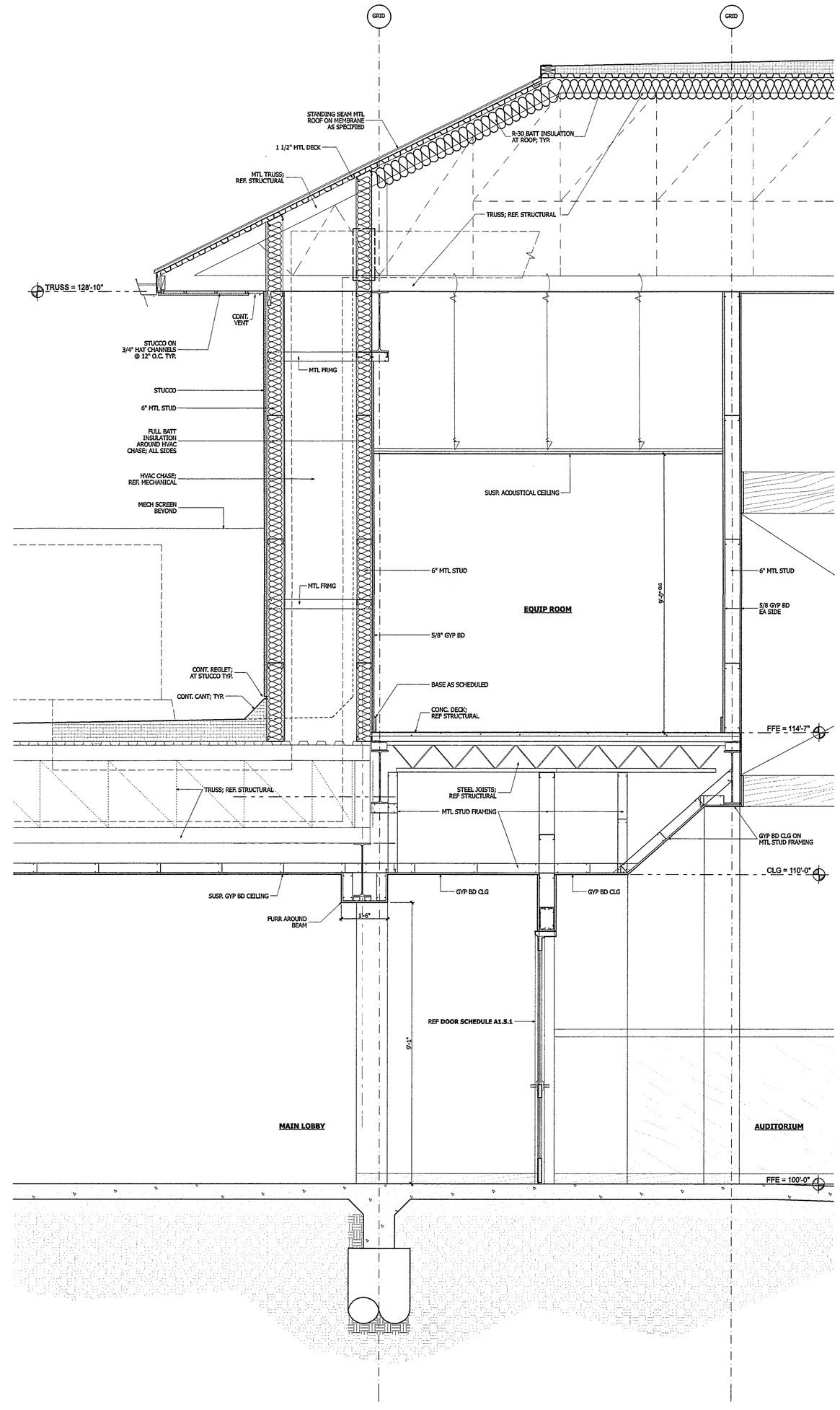

07 WALL SECTION @ A/V
SCALE: 1/2" = 1'-0"

© Copyright 2008 By Hallum Architects, Inc. - ALL RIGHTS RESERVED

REGISTERED ARCHITECT STATE OF TEXAS

Revisions:	By:

HALLUM ARCHITECTS, INC.
6040 CAMP BOWIE BLVD SUITE 17
FORT WORTH, TEXAS 76116
PHONE: 817.332.2422 FAX: 817.338.1949
email: info@hallumarch.com

NEW WORSHIP FACILITIES

EAST SIDE CHURCH of CHRIST

MLK @ HWY 183, AUSTIN, TEXAS

AUDITORIUM WALL SECTIONS

Date: 5-13-08
Scale: VARIES
Drawn:
Job: 2006-05
Sheet Number:
A1.4.2