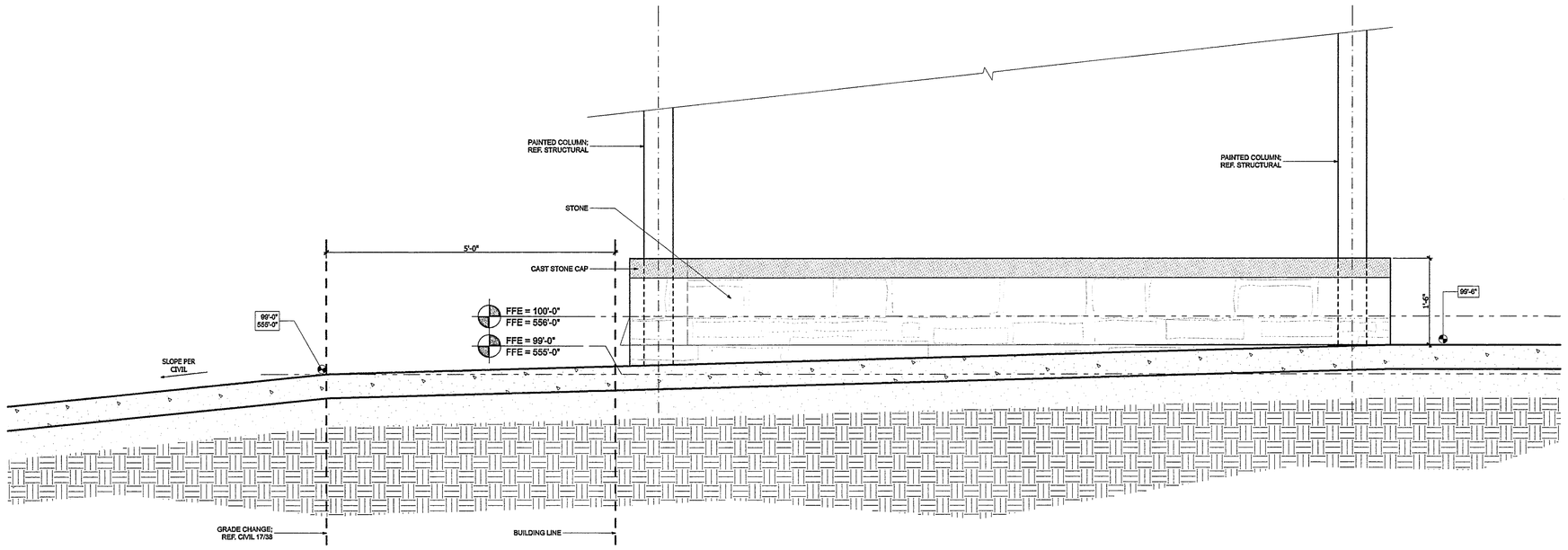

06 SECTION AT SOUTH ENTRY WALK
SCALE: 3/4" = 1'-0"

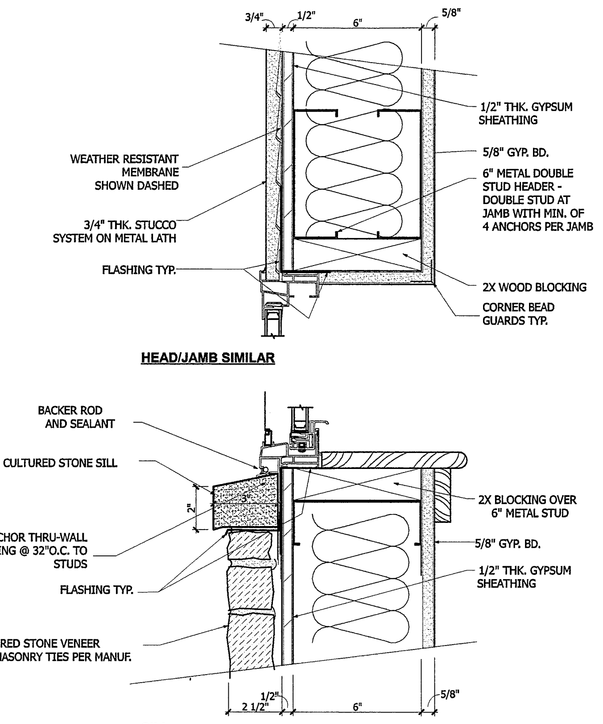

03 WINDOW DETAIL
SCALE: 3" = 1'-0"

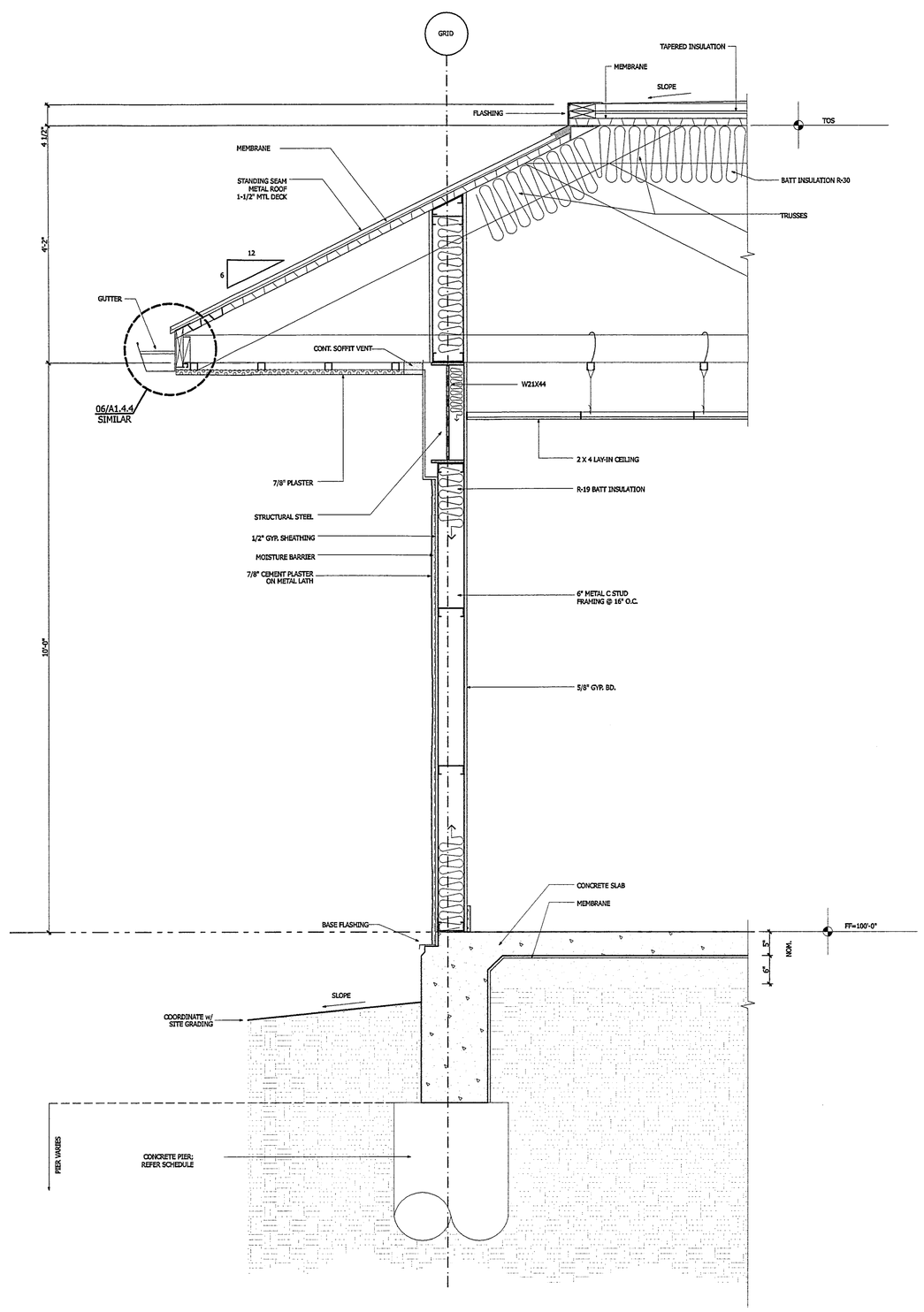

01 WALL SECTION @ WEST WALL
SCALE: 3/4" = 1'-0"

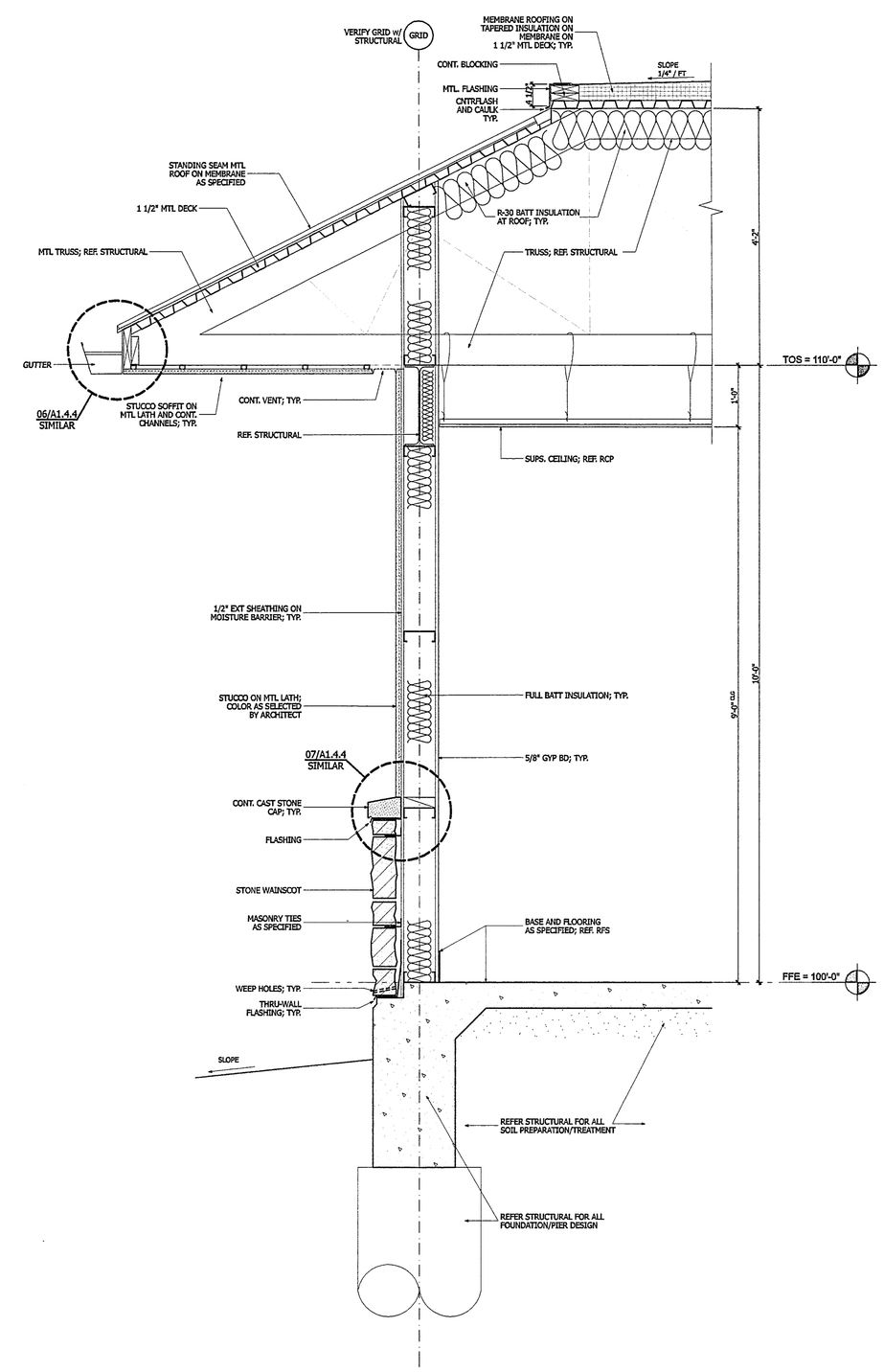

02 WALL SECTION - MINISTER'S OFFICE
SCALE: 3/4" = 1'-0"

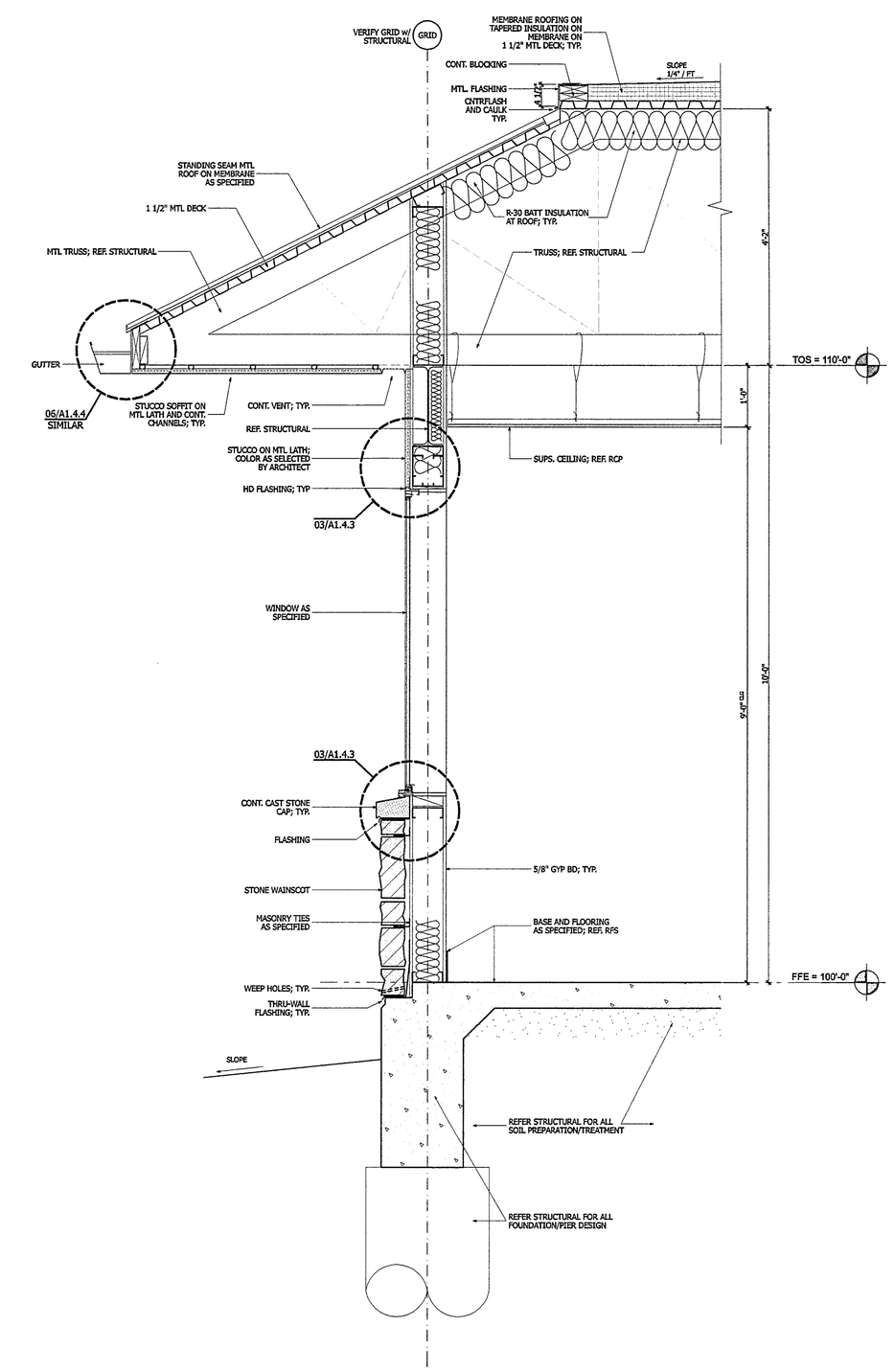

© Copyright 2008 By Hallum Architects, Inc. - ALL RIGHTS RESERVED

Revisions:	By:

HALLUM ARCHITECTS, INC.
6040 CAMP BOWIE BLVD SUITE 17
FORT WORTH, TEXAS 76116
PHONE: 817.332.2422 FAX: 817.338.1949
email: info@hallumarch.com

NEW WORSHIP FACILITIES
EAST SIDE CHURCH of CHRIST
MLK @ HWY 183, AUSTIN, TEXAS

WALL SECTIONS

Date: 5-13-08
Scale: 3/4" = 1'-0"
Drawn:
Job: 2006-05
Sheet Number:
A1.4.3