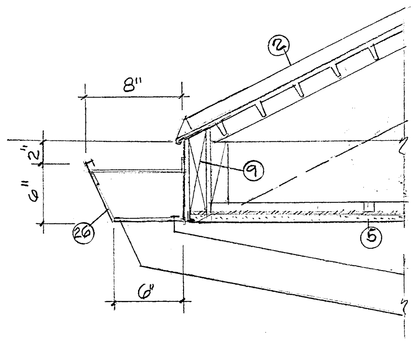

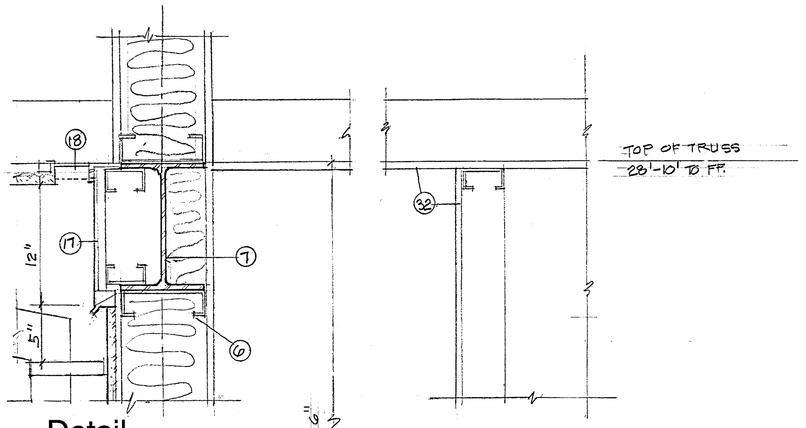

05 Detail
SCALE: 1 1/2" = 1'- 0"

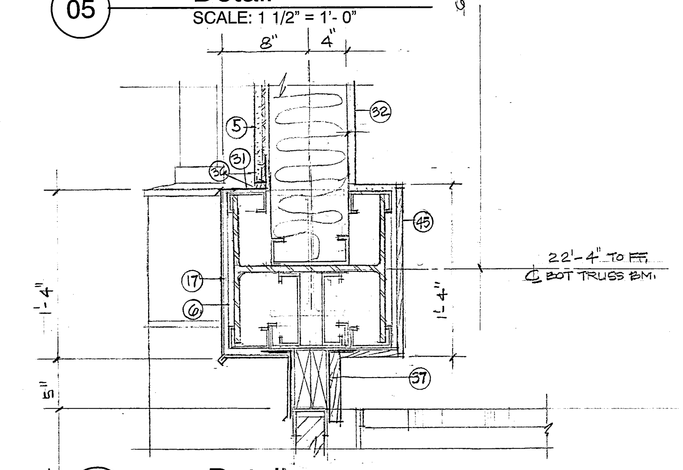

06 Detail
SCALE: 1 1/2" = 1'- 0"

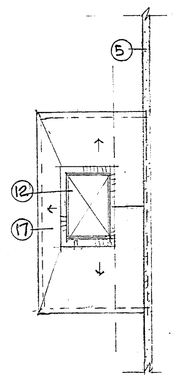

09 Detail Plan of Down Spout w/ Flashing
SCALE: 1 1/2" = 1'- 0"

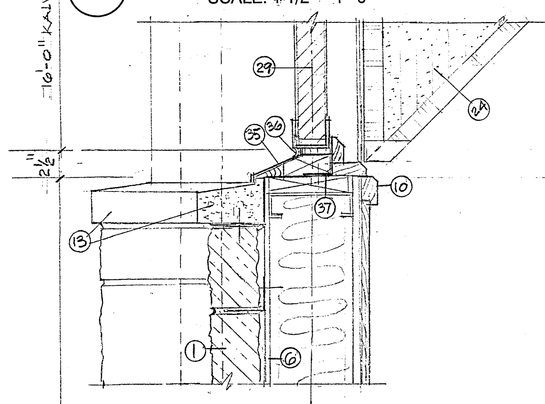

07 Detail
SCALE: 1 1/2" = 1'- 0"

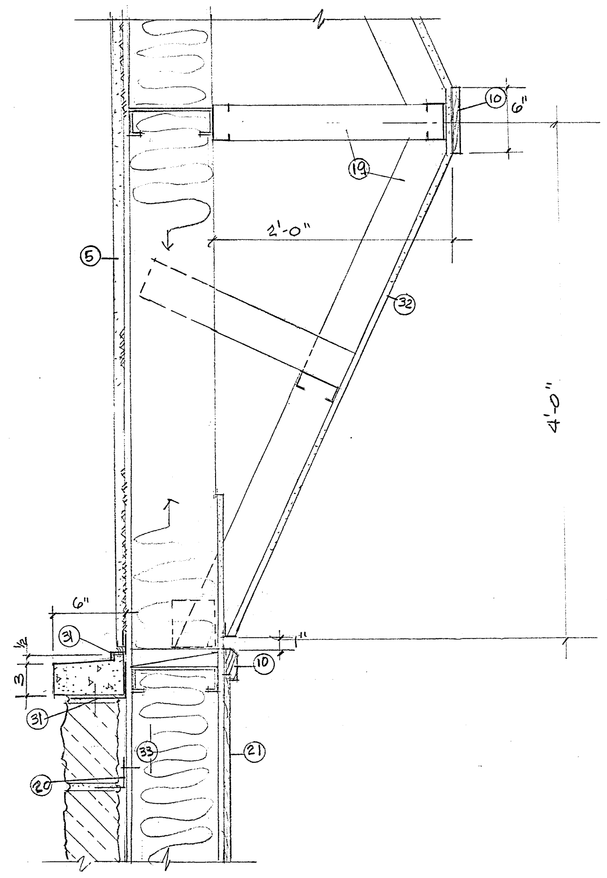

15 Reflective Acoustical Panel
SCALE:1 1/2" = 1'- 0"

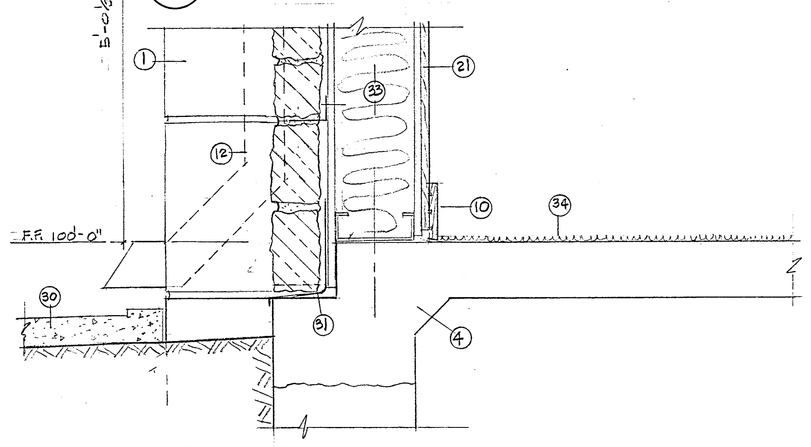

08 Detail
SCALE: 1 1/2" = 1'- 0"

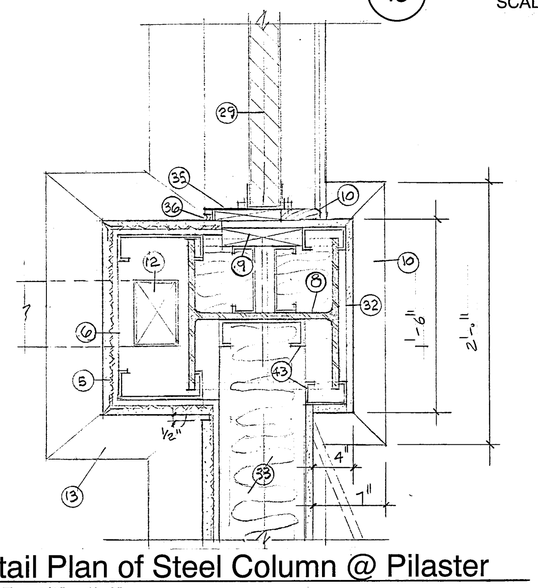

10 Detail Plan of Steel Column @ Pilaster
SCALE: 1 1/2" = 1'- 0"

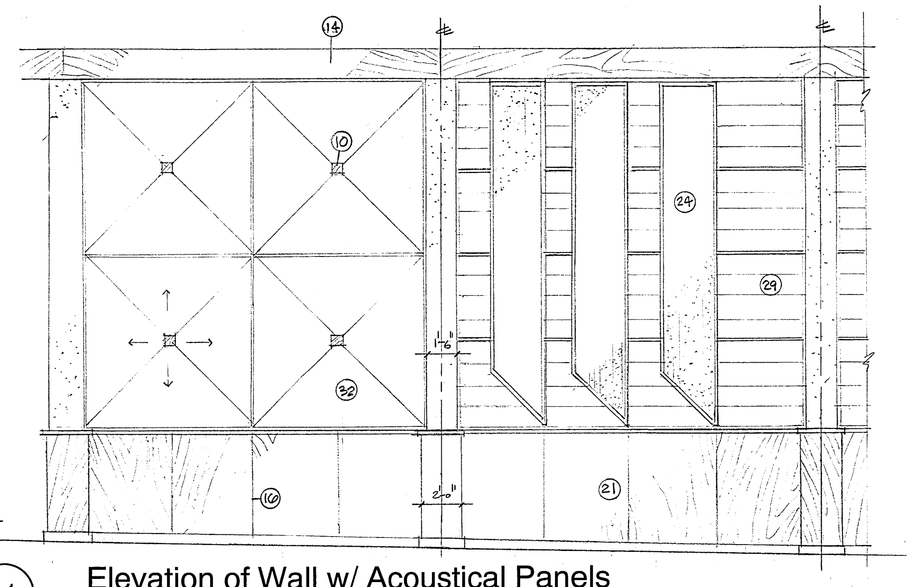

11 Elevation of Wall w/ Acoustical Panels
SCALE: 1/4" = 1'- 0"

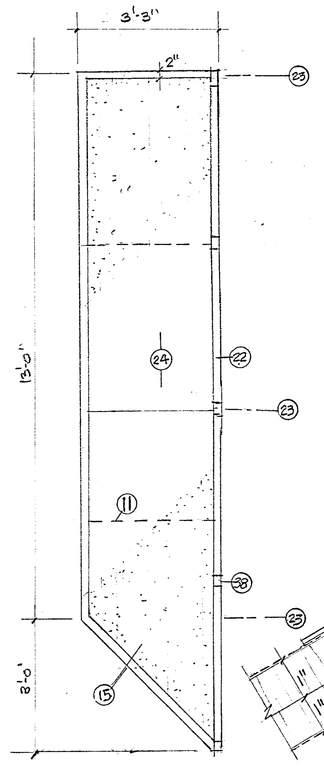

12 Detail of Acoustical Panel
SCALE: 1/2" = 1'- 0"

Wall Section Details
SCALE: 1 1/2" = 1'- 0"

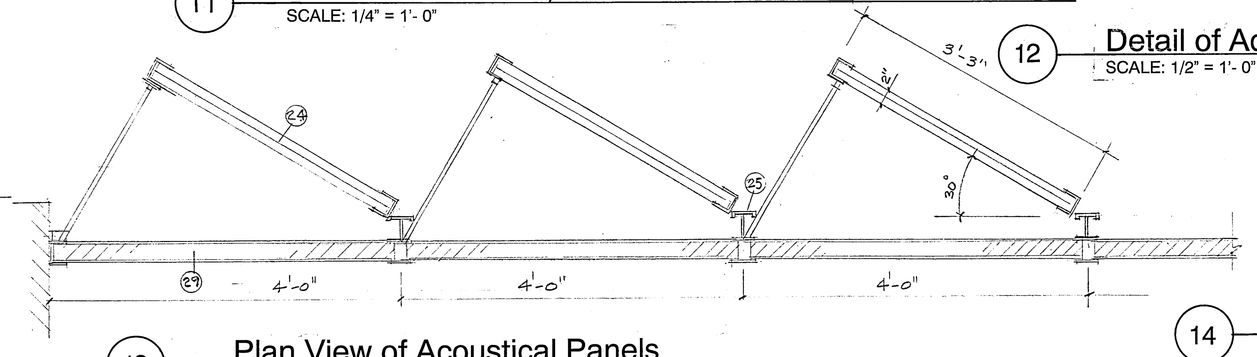

13 Plan View of Acoustical Panels
SCALE: 1" = 1'- 0"

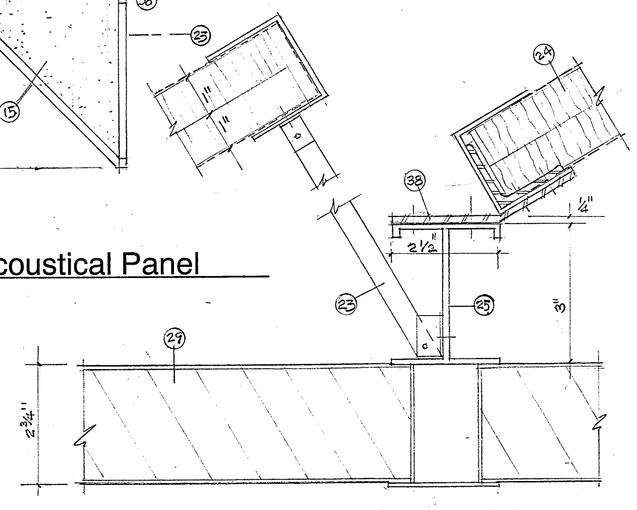

14 Detail of Acoustical Panel Connection
SCALE: 3" = 1'- 0"

Materials Legend Sheet A1.4.1

Eastside Church of Christ

1 Natural Limestone Stone as Selected
2 Standing Seam Metal Roof Material
3 Metal Screen Material to Match Roof
4 Concrete
5 Stucco/Plaster Finish as Selected
6 ½ inch Sheathing
7 Steel Truss
8 Steel Column
9 Treated Wood
10 Stained Wood Trim
11 1 inch Sound Board Overlapped
12 Metal Downspout to Match Roof/Gutter Metal
13 Cast Stone
14 Matching Plywood
15 Fabric
16 Expansion Joint
17 Metal to Match Roof
18 Soffit Vent
19 Light Gage Metal
20 Masonry Anchor
21 Wood Wainscot
22 Metal Frame
23 Metal Brace
24 Acoustic Panels
25 Kalwall Sections
26 Gutter
27 Overflow Scupper
28 Retaining Wall
29 Kalwall
30 Splash Block
31 Flashing
32 5/8 inch Gypsum Board
33 Insulation
34 Carpet
35 Metal Sub-Sill
36 Caulk
37 Metal Kalwall Anchor
38 Metal Anchors

Revisions:	By:

HALLUM ARCHITECTS, INC.
6040 CAMP BOWIE BLVD SUITE 17
FORT WORTH, TEXAS 76116
PHONE: 817.332.2422 FAX: 817.338.1949
email: info@hallumarch.com

NEW WORSHIP FACILITIES

EAST SIDE CHURCH of CHRIST

MLK @ HWY 183, AUSTIN, TEXAS

WALL SECTIONS
ACCOUSTICAL PANELS

Date: 5-13-08
Scale:
Drawn:
Job: 2006-05
Sheet Number:
A1.4.4

© Copyright 2008 By Hallum Architects, Inc. - ALL RIGHTS RESERVED