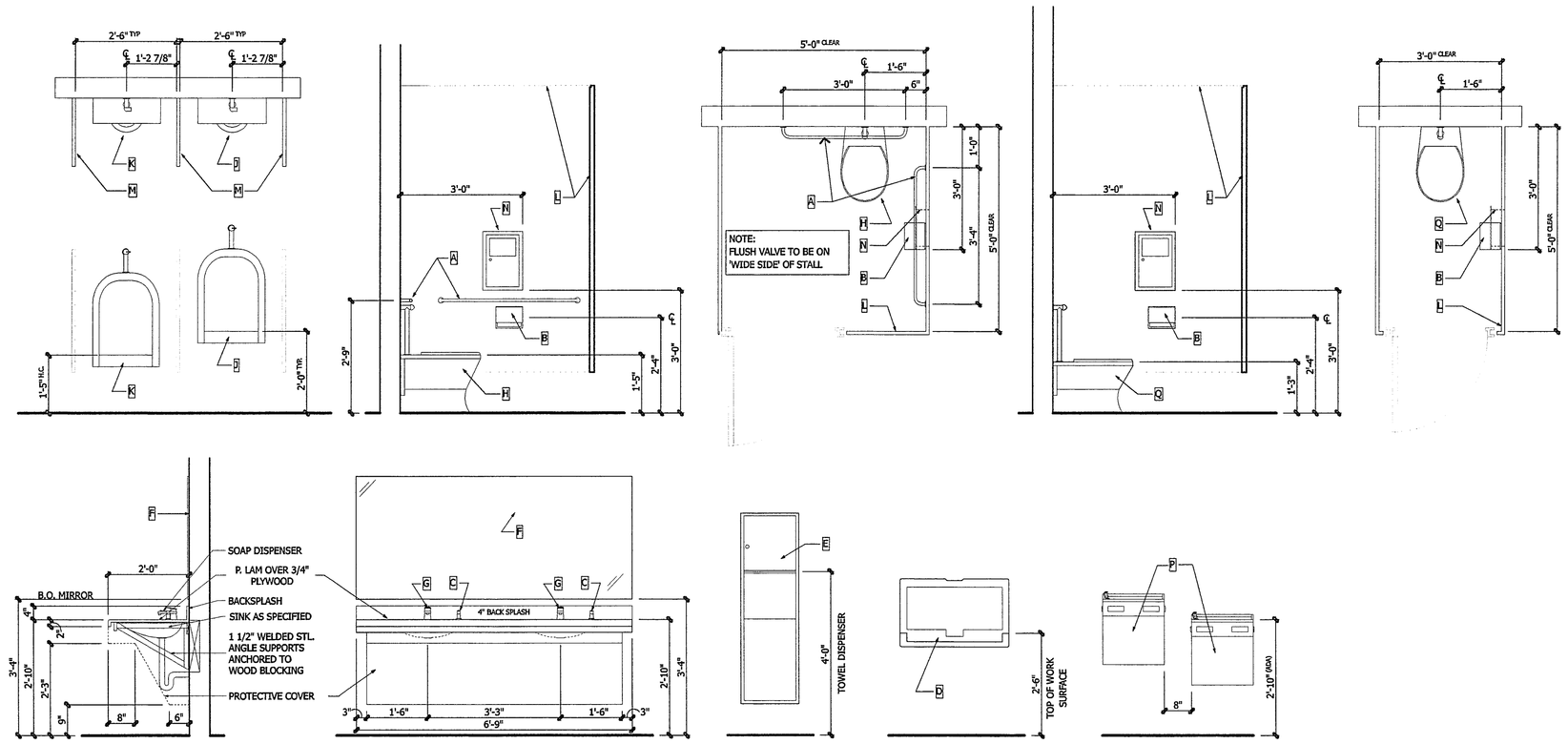

01 TOILET ROOM DETAILS -TYPICAL
SCALE: 1/2" = 1'-0"

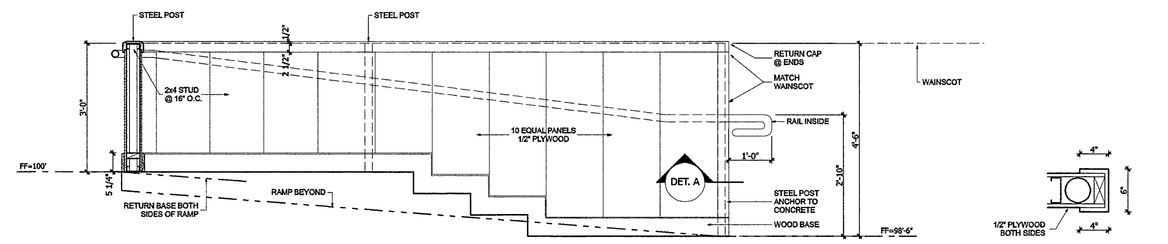

06 RAILING DETAIL
SCALE: 1/2" = 1'-0"

01 DET. A
SCALE: 1" = 1'-0"

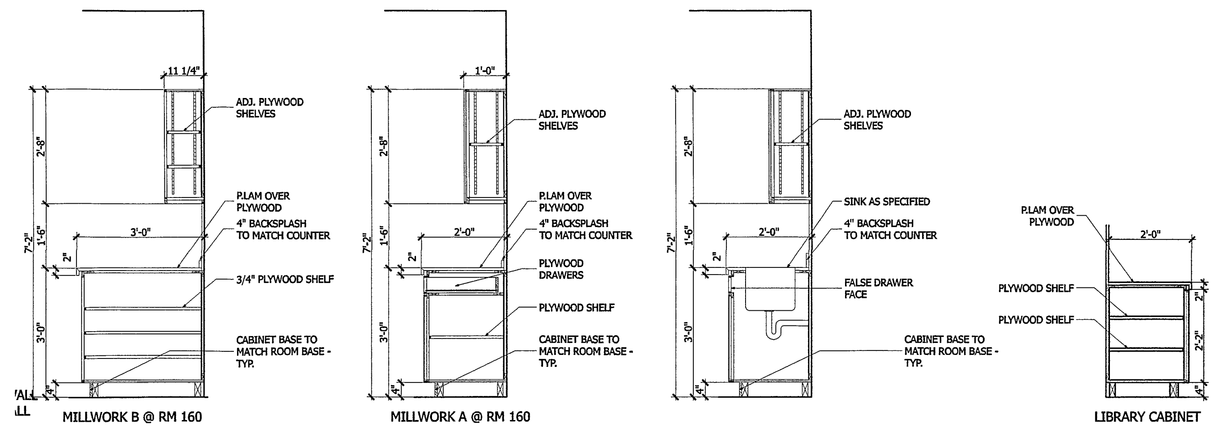

03 MILLWORK DETAILS - TYPICAL
SCALE: 1/2" = 1'-0"

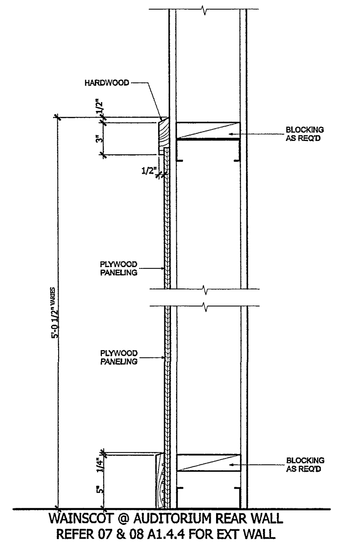

01 WAINSCOT @ REAR WALL
SCALE: 1 1/2"= 1'-0"

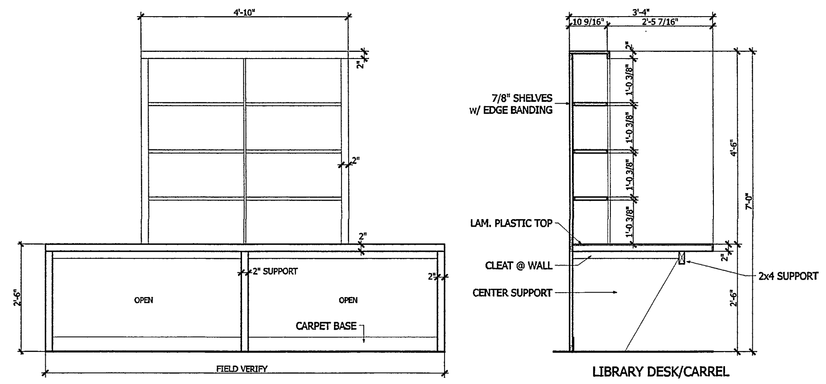

07 CARREL
SCALE: 1/2" = 1'-0"

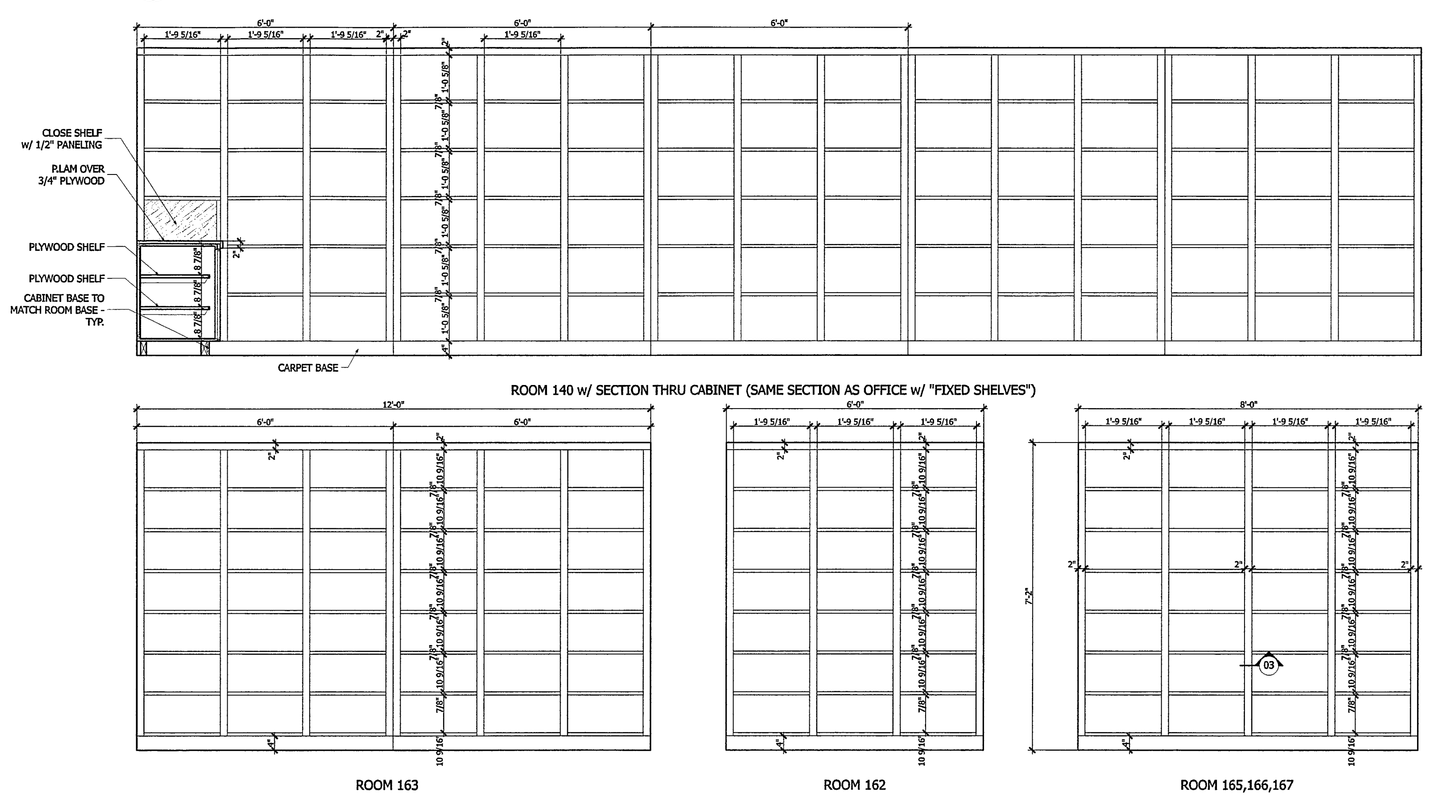

05 BOOKSHELVES
SCALE: 1/2" = 1'-0"

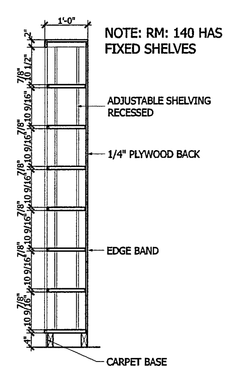

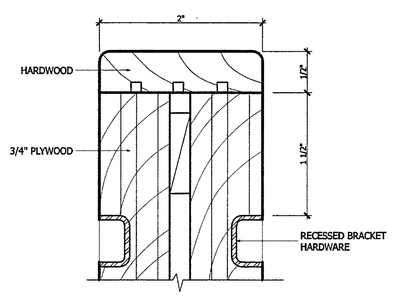

03 DET. B
SCALE: 1" = 1'-0"

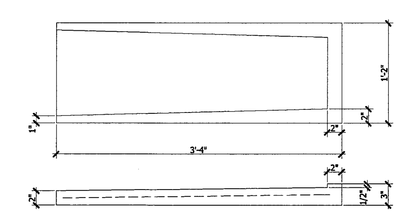

04 SPLASH BLOCK
SCALE: 1" = 1'-0"

WALL TYPES

P-1 3 5/8" MTL. STUDS W/ 5/8" GYP. BD. BOTH SIDES	
P-1A SOUND INSULATION	
P-2 6" MTL. STUDS W/ 5/8" GYP. BD. BOTH SIDES	
P-2A SOUND INSULATION	
P-3 TWO 3 5/8" MTL. STUDS W/ 5/8" GYP. BD. BOTH SIDES	SOUND INSULATION
P-4 TWO 3 5/8" MTL. STUDS W/ 5/8" GYP. BD. BOTH SIDES - SEE FLOOR PLAN FOR WALL THICKNESS	SOUND INSULATION

NOTE:
ALL STUDS TO BE SPACES @ 16" O.C. (U.N.O.)

01 WALL TYPES
SCALE: 1" = 1'-0"

REST ROOM LEGEND

A	GRAB BARS
B	TOILET PAPER HOLDER
C1	IN-COUNTER SOAP DISPENSER
C2	SURFACE-MOUNTED SOAP DISPENSER
D	BABY CHANGING STATION
E	PAPER TOWEL DISPENSER/ WASTE RECEPTACLE
F	MIRROR
G	SINK TYPE L-1
G2	SINK TYPE L-2
G3	SINK TYPE L-3 WALL MOUNT H.C.
H	17" FLOOR-MOUNTED TOILET
J	STANDARD URINAL
K	HANDICAP URINAL
L	TOILET PARTITION
M	URINAL PARTITION
N	SANITARY NAPKIN DISPOSAL - WOMEN'S ONLY
P	WATER FOUNTAIN
Q	15" FLOOR-MOUNTED TOILET
Q2	CHILDREN'S TRAINING TOILET
R	WATER HEATER
S	MOP SINK
T	SHOWER UNIT
U	PAPER TOWEL HOLDER
V	MTL. SHELF
W	ROBE HOOK
Y	PROTECTIVE COVER
Z	WALL-HUNG MOP RACK

© Copyright 2008 By Hallum Architects, Inc. - ALL RIGHTS RESERVED

REGISTERED ARCHITECT STATE OF TEXAS 2475

Revisions:	By:

HALLUM ARCHITECTS, INC.
6040 CAMP BOWIE BLVD SUITE 17
FORT WORTH, TEXAS 76116
PHONE: 817.332.2422 FAX: 817.338.1949
email: info@hallumarch.com

NEW WORSHIP FACILITIES

EAST SIDE CHURCH of CHRIST

MLK @ HWY 183, AUSTIN, TEXAS

HC STANDARDS & MILLWORK

Date: 5-12-08
Scale:
Drawn:
Job: 2006-05
Sheet Number:
A1.6.1