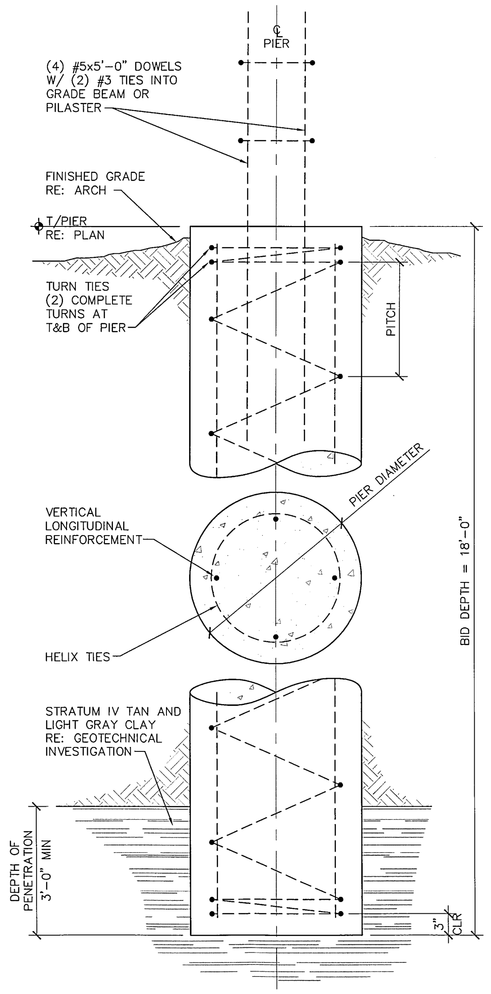

PIER REINFORCEMENT			
PIER MARK	DIAMETER	VERTICAL	TIES @ PITCH
P01	18"	(6) #6	#3 @ 10"
P02	24"	(6) #8	#3 @ 12"
P03	30"	(7) #9	#3 @ 14"
P04	36"	(8) #10	#3 @ 16"

01 TYPICAL PIER DETAIL
NOT TO SCALE

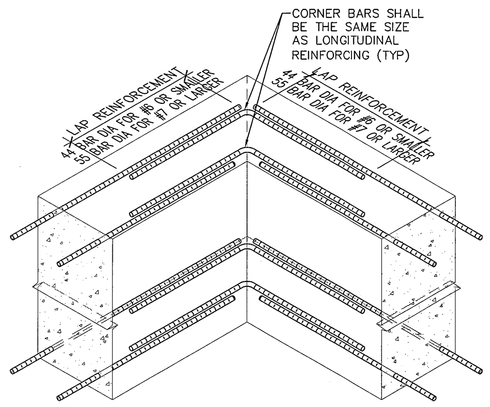

DETAIL NOTES:
1. LAP LONGITUDINAL REINFORCEMENT 44 BAR DIAMETERS FOR #6 REINF AND SMALLER, AND 55 BAR DIAMETERS FOR #7 REINF AND LARGER.

02 TYP GRADE BEAM REINFORCING
NOT TO SCALE

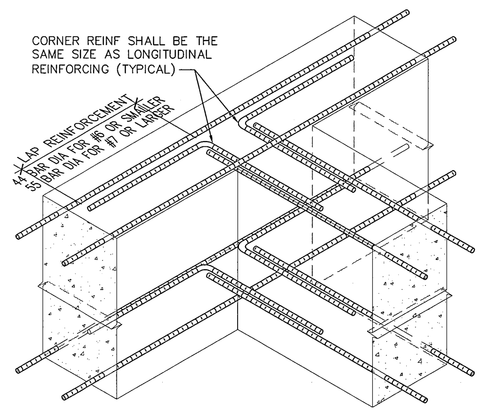

DETAIL NOTES:
1. LAP LONGITUDINAL REINFORCEMENT 44 BAR DIAMETERS FOR #6 REINF AND SMALLER, AND 55 BAR DIAMETERS FOR #7 REINF AND LARGER.

03 TYP GRADE BEAM REINFORCING
NOT TO SCALE

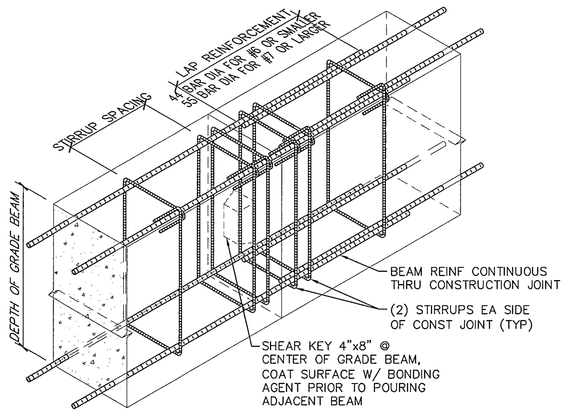

DETAIL NOTES:
1. LOCATE GRADE BEAM CONSTRUCTION JOINTS WITHIN THE MIDDLE ONE-THIRD OF SPAN FOR GRADE BEAMS SUPPORTED BY PIERS OR FOOTINGS.

04 TYP GRADE BEAM REINFORCING
NOT TO SCALE

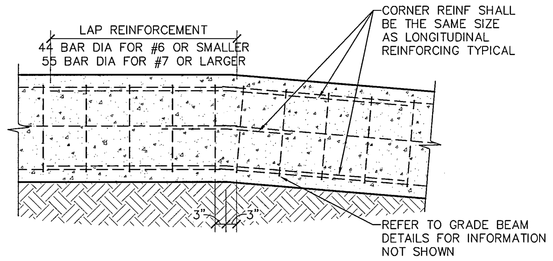

05 TYPICAL SLOPING GRADE BEAM
NOT TO SCALE

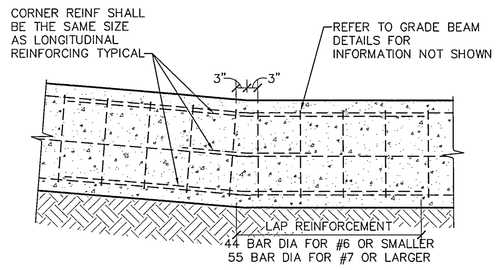

06 TYPICAL SLOPING GRADE BEAM
NOT TO SCALE

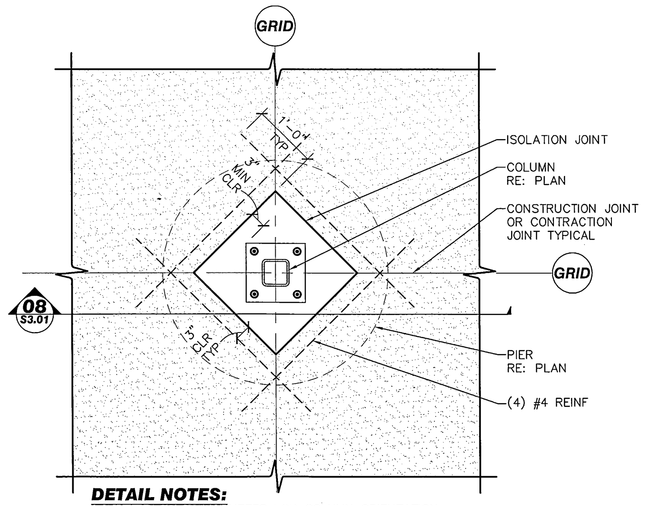

DETAIL NOTES:
1. REFER TO PLAN SHEETS FOR COLUMN ORIENTATION.
2. PROVIDE MINIMUM SIZE LEAVE-OUT AS REQUIRED FOR COLUMN AND BASE PLATE DIMENSIONS, AND FOR INSTALLATION AND GROUTING ACCESSIBILITY.

07 TYPICAL INTERIOR SLAB LEAVE-OUT
SCALE: 3/4" = 1'-0"

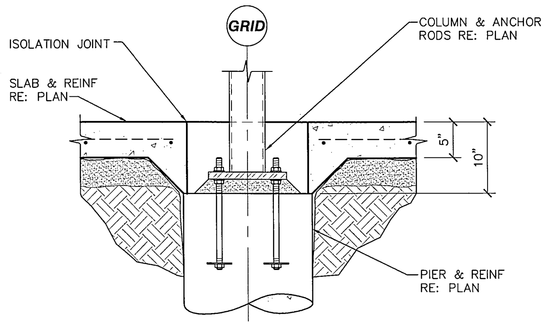

08 TYP PIER LEAVE-OUT SECTION
SCALE: 1" = 1'-0"

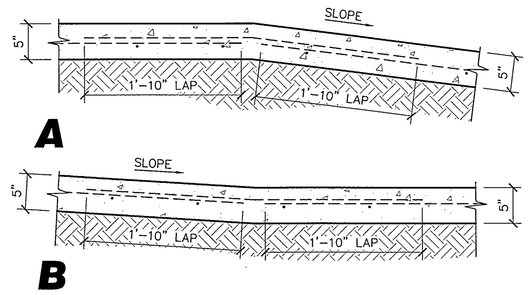

09 SLAB DETAILS
SCALE: 1" = 1'-0"

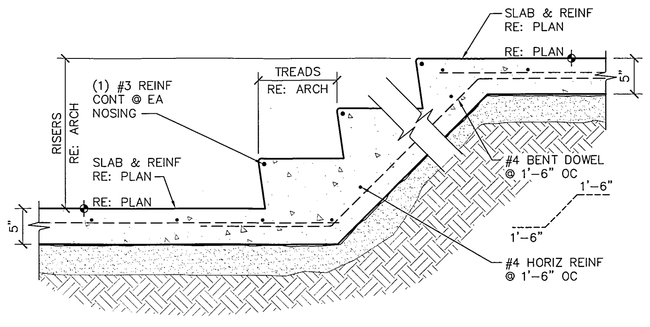

10 STAIR SECTION
SCALE: 1" = 1'-0"

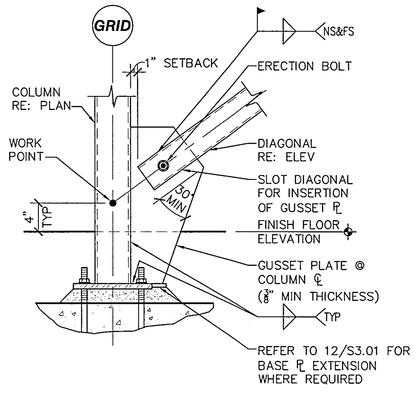

DETAIL NOTES:
1. DETAIL SHOWN IS FOR GENERAL DESIGN INTENT ONLY. CONNECTION DESIGN TO BE ENGINEERED BY FABRICATOR. REFER TO STRUCTURAL STEEL NOTES.

11 LATERAL BRACING DETAIL
SCALE: 1" = 1'-0"

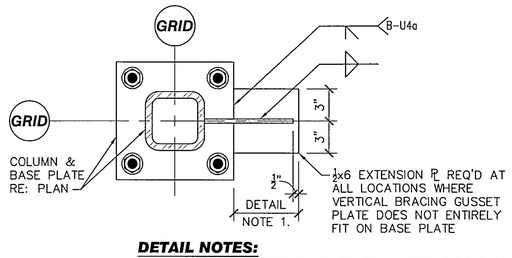

DETAIL NOTES:
1. LENGTH OF EXTENSION PLATE SHALL PERMIT BEARING SURFACE FOR ENTIRE BOTTOM EDGE OF GUSSET PLATE PLUS AN ADDITIONAL ½".

12 TYPICAL BASE PLATE EXTENSION AT VERTICAL BRACING
NOT TO SCALE

Revisions:	By:

HALLUM ARCHITECTS, INC.
6040 CAMP BOWIE BLVD SUITE 17
FORT WORTH, TEXAS 76116
PHONE: 817.332.2422 FAX: 817.338.1949
email: info@hallumarch.com

NEW WORSHIP FACILITIES & EDUCATION BUILDING

EAST SIDE CHURCH of CHRIST

MLK @ HWY 183, AUSTIN, TEXAS

FOUNDATION DETAILS

STATE OF TEXAS
ADAM W. BOYETTE
93768
LICENSED
PROFESSIONAL ENGINEER
3-20-08

Structural Solutions, Inc.
Engineering Consultants
6410 Southwest Blvd., Suite 210
Fort Worth, Texas 76109-3920
817.569.0070 · 817.569.0075 fax

© COPYRIGHT 2008 BY STRUCTURAL SOLUTIONS, INC.

Date:	03/20/08
Scale:	As Shown
Drawn:	JSQ
Job:	2006-05
Sheet Number:	S3.01

J:\2006\05 - East Side Church of Christ\AutoCAD\Drawing Files\East Side-S3.01.dwg, 3/20/2008 4:00:42 PM, Jude