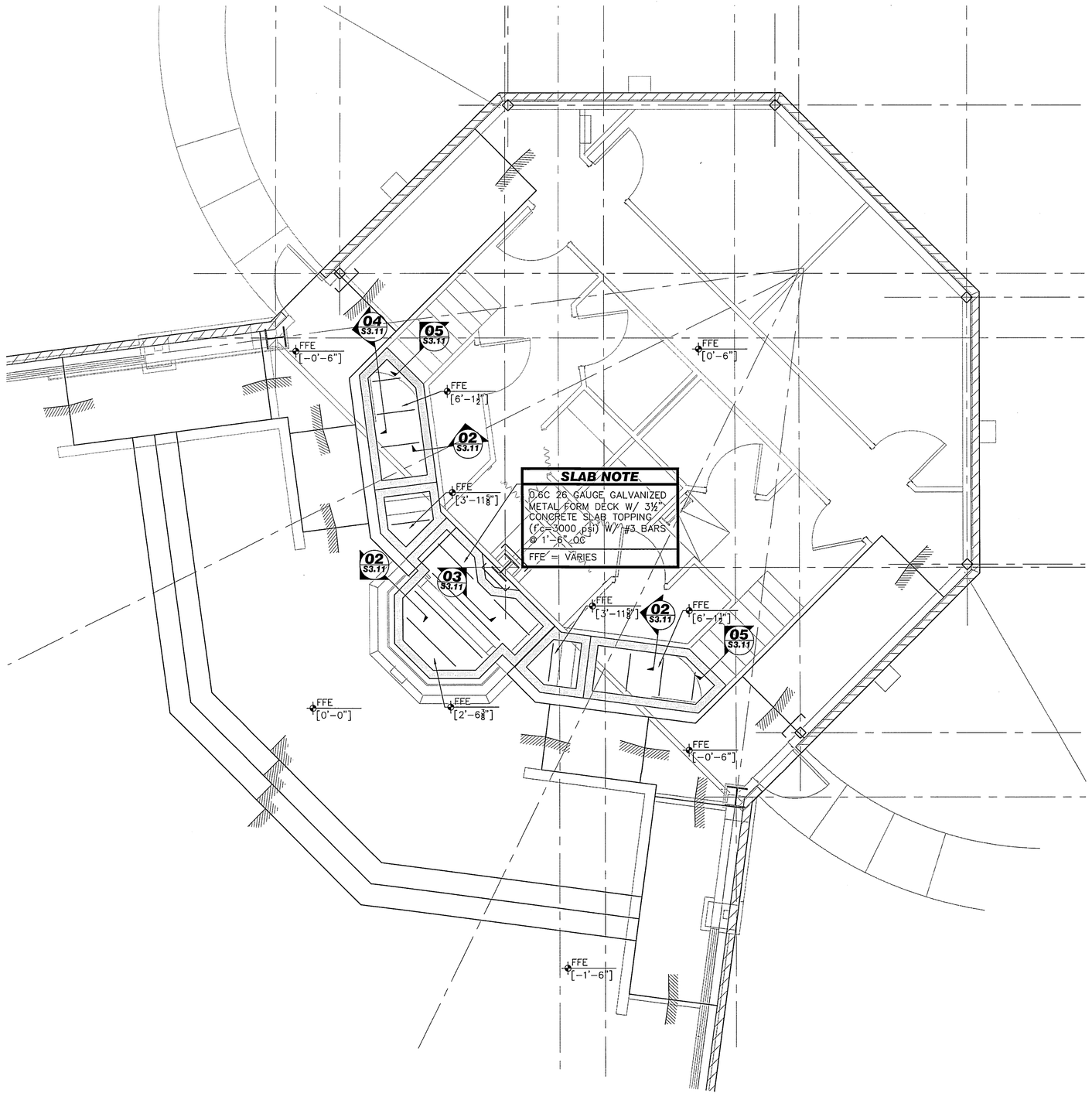

PLAN NOTES:
1. FOR EXACT FLOOR SLOPES REFER TO ARCH.
2. FINISHED FLOOR ELEVATION VARIES. RE: PLAN.

01 ELEVATED FLOOR FRAMING PLAN
SCALE: ¼" = 1'-0"

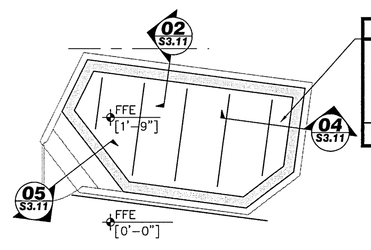

SLAB NOTE
0.6C 26 GAUGE GALVANIZED METAL FORM DECK W/ 3½" CONCRETE SLAB TOPPING (f'c=3000 psi) W/ #3 BARS @ 1'-6" OC
FFE = [1'-9"]

06 ELEVATED FLOOR FRAMING PLAN
SCALE: ¼" = 1'-0"

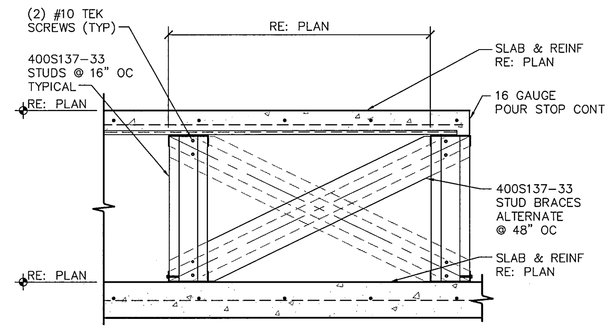

02 FRAMING SECTION
SCALE: 1" = 1'-0"

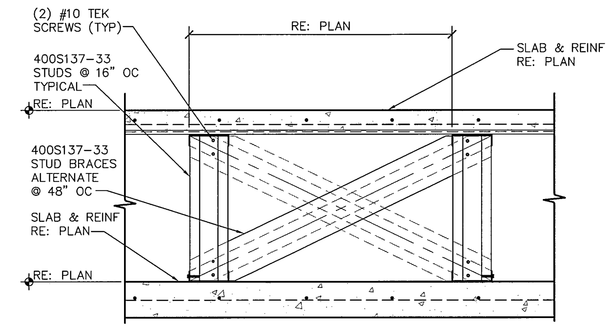

03 FRAMING SECTION
SCALE: 1" = 1'-0"

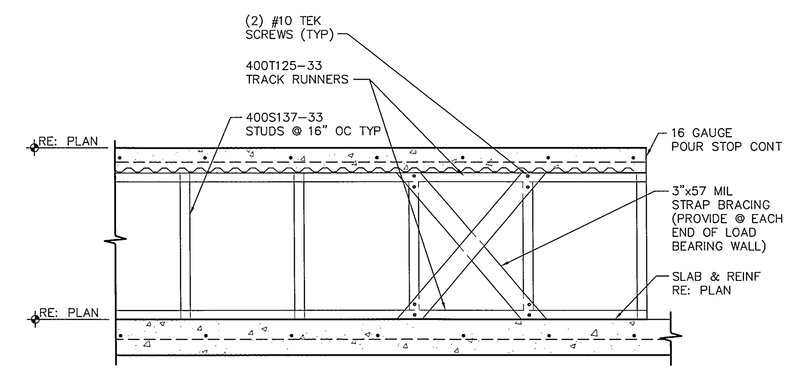

04 FRAMING SECTION
SCALE: 1" = 1'-0"

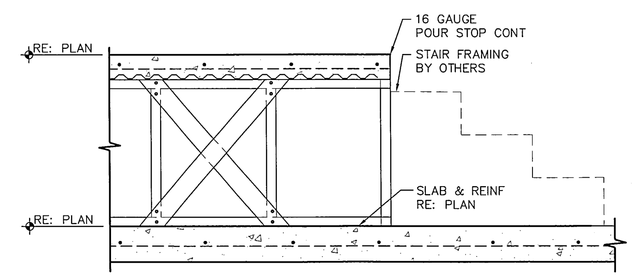

05 FRAMING SECTION
SCALE: 1" = 1'-0"

Revisions:	By:

HALLUM ARCHITECTS, INC.
6040 CAMP BOWIE BLVD. SUITE 17
FORT WORTH, TEXAS 76116
PHONE: 817.332.2422 FAX: 817.338.1949
email: info@hallumarch.com

NEW WORSHIP FACILITIES & EDUCATION BUILDING
EAST SIDE CHURCH of CHRIST
MLK @ HWY 183, AUSTIN, TEXAS

FLOOR FRAMING DETAILS

STATE OF TEXAS
ADAM W. BOYETTE
93768
LICENSED PROFESSIONAL ENGINEER
4-2008

Structural Solutions, Inc.
Engineering Consultants
6410 Southwest Blvd., Suite 210
Fort Worth, Texas 76109-3920
817.569.0070 · 817.569.0075 fax

© COPYRIGHT 2008 BY STRUCTURAL SOLUTIONS, INC.

Date:	03/20/08
Scale:	As Shown
Drawn:	JSQ
Job:	2006-05
Sheet Number:	S3.11

J:\2006\2006 - East Side Church of Christ\AutoCAD\Drawing Files\East Side-S3.11.dwg, 3/20/2008 4:03:03 PM, Julio