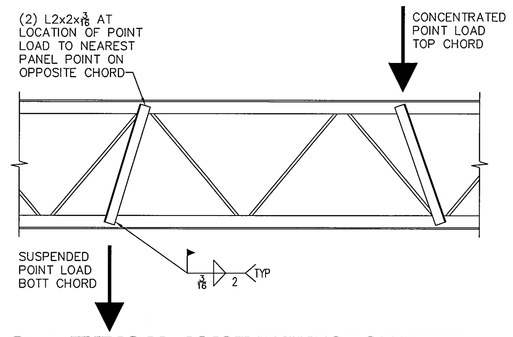

01 TYPICAL JOIST REINFORCEMENT
NOT TO SCALE

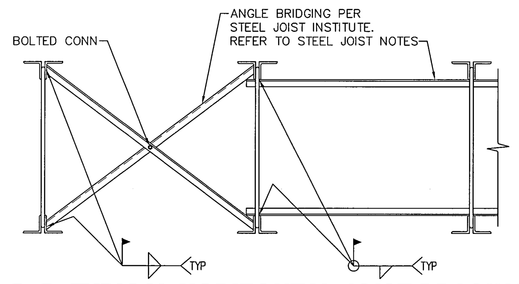

02 TYPICAL HORIZONTAL JOIST BRACING
SCALE: 1" = 1'-0"

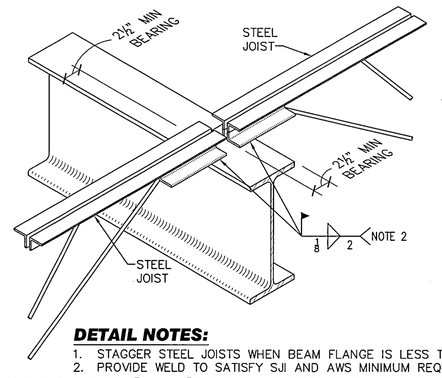

DETAIL NOTES:
1. STAGGER STEEL JOISTS WHEN BEAM FLANGE IS LESS THAN 5¼".
2. PROVIDE WELD TO SATISFY SJI AND AWS MINIMUM REQUIREMENTS.

03 TYPICAL STEEL JOIST TO BEAM
NOT TO SCALE

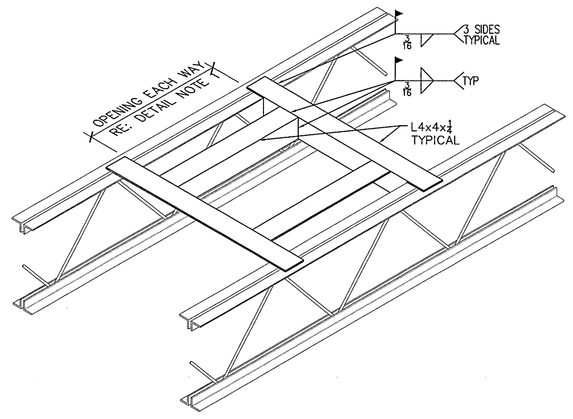

DETAIL NOTES:
1. ANGLES SHALL BE LOCATED UNDER MECHANICAL EQUIPMENT ROOF DECK PENETRATIONS PER MANUFACTURER SPECIFICATIONS.

04 ROOF PENETRATION FRAMING
NOT TO SCALE

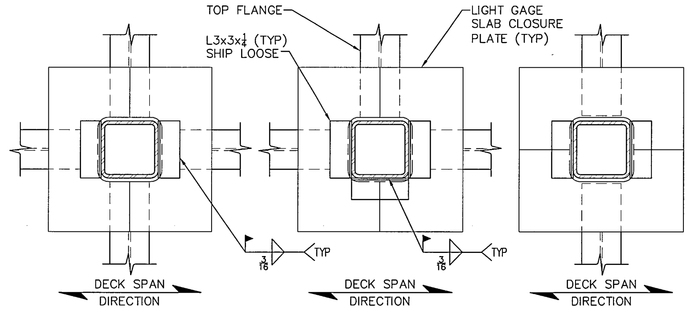

05 TYPICAL DECK SUPPORT @ COLUMN
NOT TO SCALE

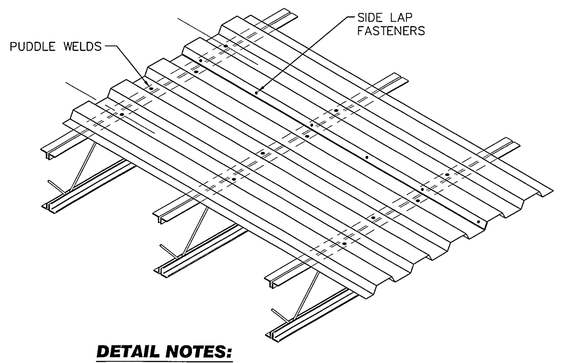

DETAIL NOTES:
1. REFER TO DETAIL 07/S5.01 DECK FASTENER LAYOUT FOR DECK ATTACHMENT REQUIREMENTS.

06 TYPICAL ROOF DECK LAYOUT
NOT TO SCALE

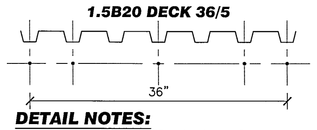

DETAIL NOTES:
1. PROVIDE (7) #10 TEK SIDELAP FASTENERS.
2. SUPPORT FASTENERS SHALL BE #12 TEK SCREWS.
3. THIS LAYOUT APPLIES TO THE ROOF DECK INSTALLED ON THE LIGHT GAGE TRUSSES.

07 ROOF DECK FASTENER LAYOUT
SCALE: 1" = 1'-0"

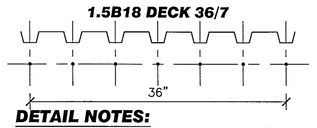

DETAIL NOTES:
1. PROVIDE (6) #10 TEK SIDELAP FASTENERS.
2. SUPPORT FASTENERS SHALL BE ⅜"ø PUDDLE WELDS.
3. THIS LAYOUT APPLIES TO THE ROOF DECK INSTALLED ON THE STEEL JOISTS AT THE ROOF BEHIND THE BAPTISTRY.

08 ROOF DECK FASTENER LAYOUT
SCALE: 1" = 1'-0"

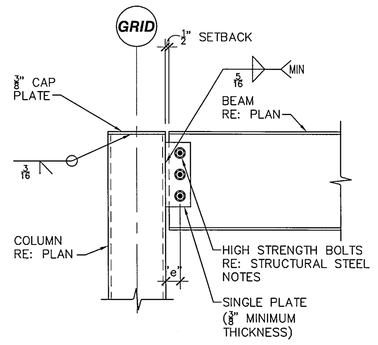

DETAIL NOTES:
1. DETAIL SHOWN IS FOR GENERAL DESIGN INTENT ONLY. CONNECTION DESIGN TO BE ENGINEERED BY FABRICATOR. REFER TO STRUCTURAL STEEL NOTES.
2. DESIGN BOLTS AND WELD FOR ECCENTRICITY "e".

09 TYP BEAM TO HSS COLUMN
SCALE: 1" = 1'-0"

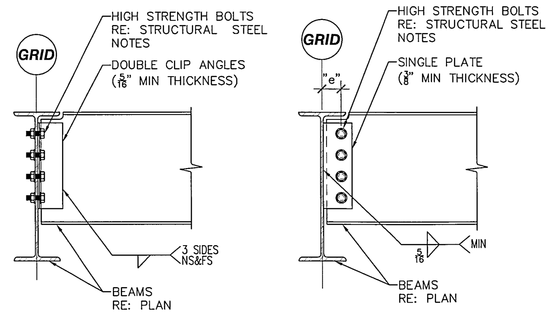

DETAIL NOTES:
1. DESIGN BOLTS AND WELD FOR ECCENTRICITY 'E'.
2. DETAIL SHOWN IS FOR GENERAL DESIGN INTENT ONLY. FINAL DESIGN TO BE ENGINEERED BY FABRICATOR. REFER TO STRUCTURAL STEEL NOTES.

10 BEAM TO BEAM CONN
SCALE: 1" = 1'-0"

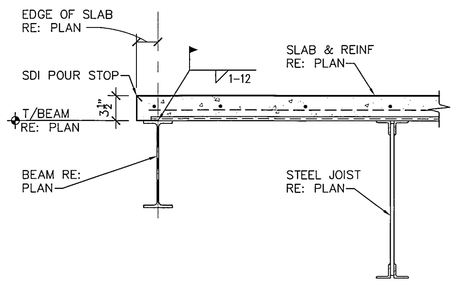

11 DECK EDGE SECTION
SCALE: 1" = 1'-0"

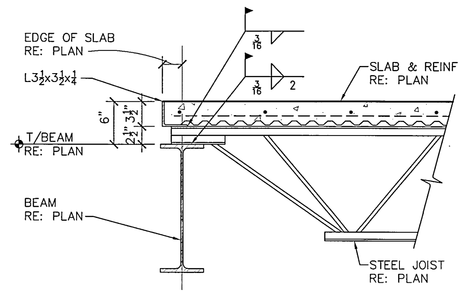

12 DECK EDGE SECTION
SCALE: 1" = 1'-0"

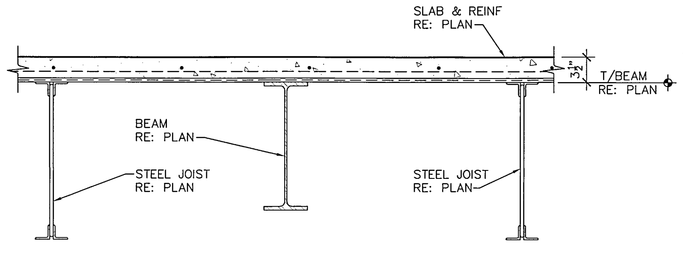

13 FLOOR SECTION
SCALE: 1" = 1'-0"

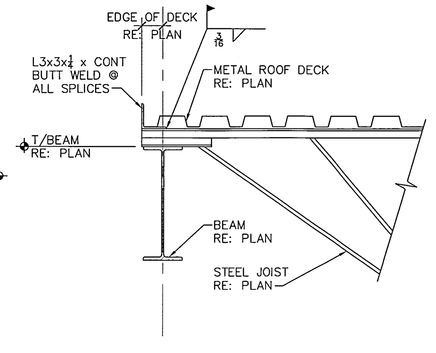

14 ROOF SECTION
SCALE: 1" = 1'-0"

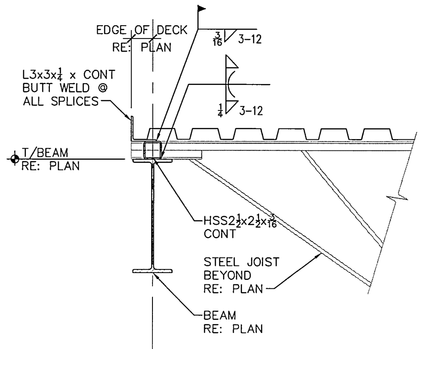

15 ROOF SECTION
SCALE: 1" = 1'-0"

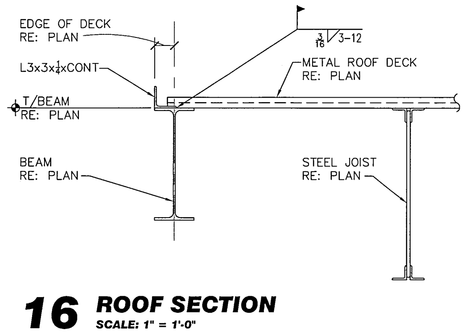

16 ROOF SECTION
SCALE: 1" = 1'-0"

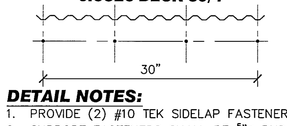

DETAIL NOTES:
1. PROVIDE (2) #10 TEK SIDELAP FASTENERS.
2. SUPPORT FASTENERS SHALL BE ⅜"ø PUDDLE WELDS.

17 FORM DECK FASTENER LAYOUT
SCALE: 1" = 1'-0"

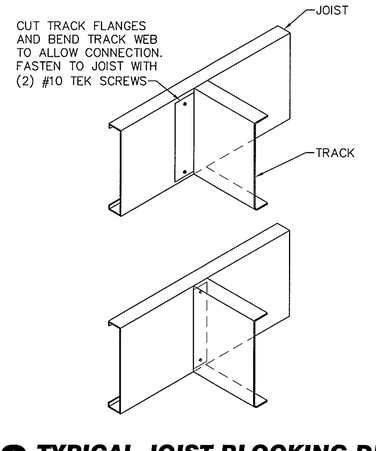

18 TYPICAL JOIST BLOCKING DETAIL
SCALE: 1" = 1'-0"

Revisions:	By:

HALLUM ARCHITECTS, INC.
6040 CAMP BOWIE BLVD SUITE 17
FORT WORTH, TEXAS 76116
PHONE: 817.332.2422 FAX: 817.338.1949
email: info@hallumarch.com

NEW WORSHIP FACILITIES & EDUCATION BUILDING

EAST SIDE CHURCH of CHRIST

MLK @ HWY 183, AUSTIN, TEXAS

FRAMING DETAILS

STATE OF TEXAS — ADAM W. BOVETTE — 93768 — LICENSED PROFESSIONAL ENGINEER — 3-20-08

Date:	03/20/08
Scale:	As Shown
Drawn:	JSQ
Job:	2006-05
Sheet Number:	S5.01

Structural Solutions, Inc.
Engineering Consultants
6410 Southwest Blvd., Suite 210
Fort Worth, Texas 76109-3920
817.569.0070 · 817.569.0075 fax

© COPYRIGHT 2008 BY STRUCTURAL SOLUTIONS, INC.

J:\2006\2006 - Set Site Church of Christ\AutoCAD\Drawing Files\Set Site-S5.01.dwg, 3/20/2008 4:02:18 PM, Jub