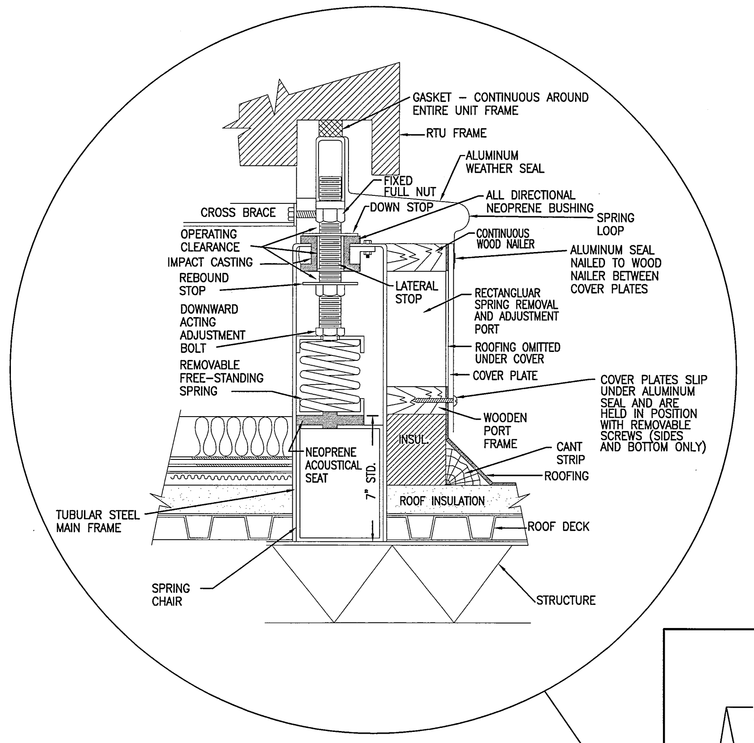

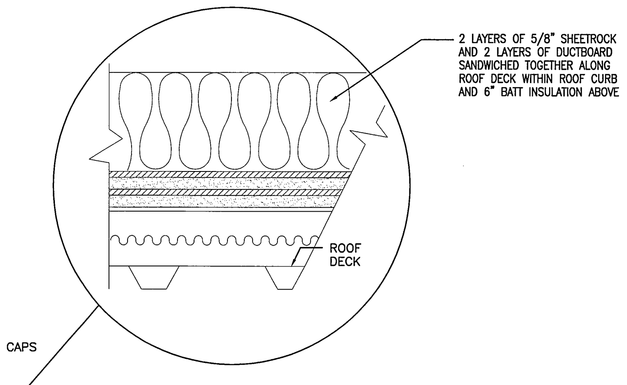

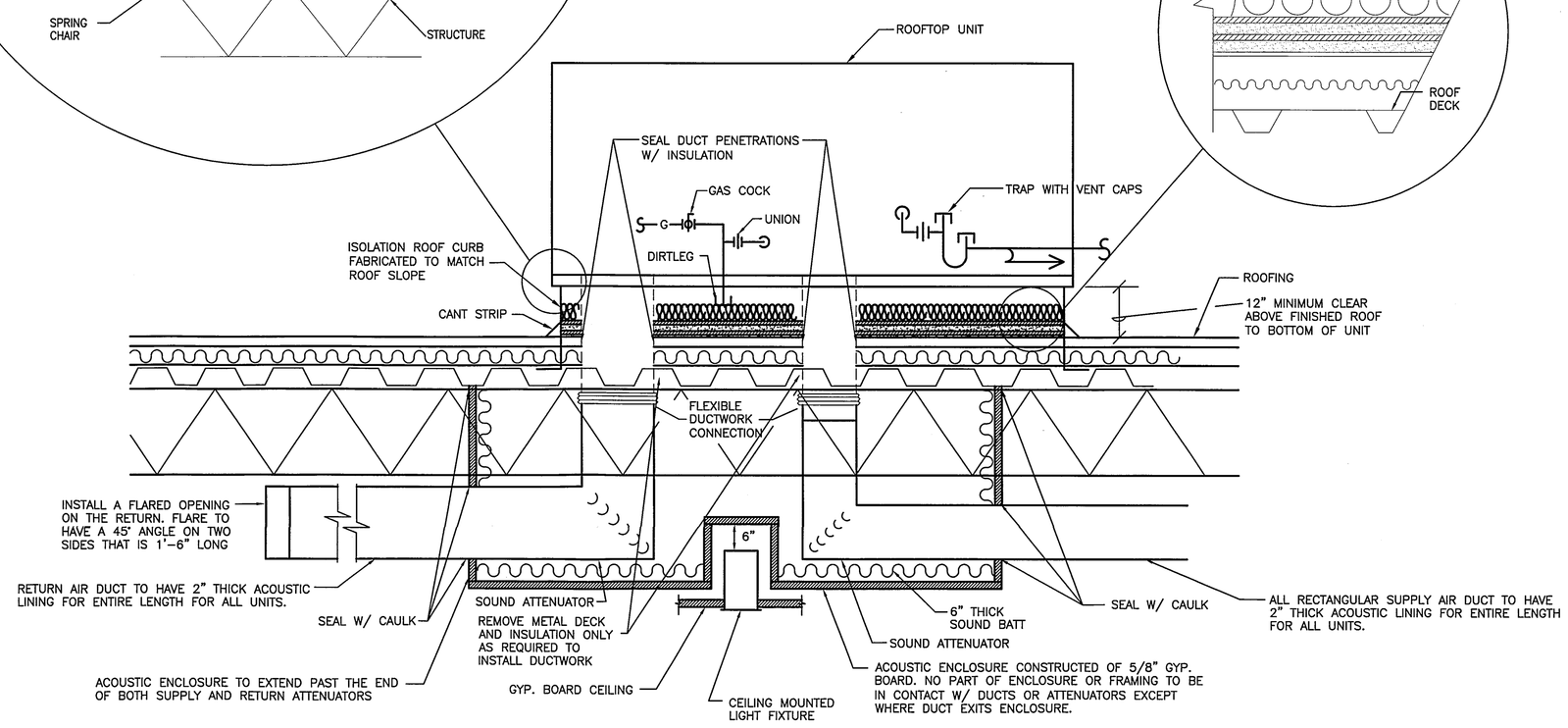

TYPICAL ROOFTOP UNIT W/ VIBRATION ISOLATION CURB (1 / M2.01)

NOT TO SCALE

NOTES:

1. ALL ELECTRICAL CONNECTIONS SHALL PENETRATE ROOF WITHIN UNIT CURB. DO NOT PENETRATE ROOF CURB

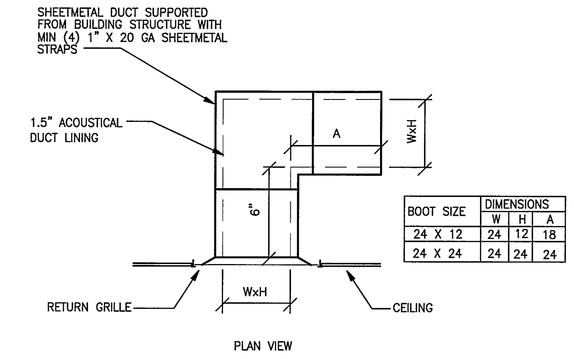

BOOT SIZE	DIMENSIONS		
	W	H	A
24 X 12	24	12	18
24 X 24	24	24	24

SOUND ATTENUATION BOOT (2 / M2.01)

NOT TO SCALE

NOTE:

1. PROVIDE FOR ALL RETURN GRILLES OPEN TO A RETURN AIR PLENUM.

UNIT TYPE	"A"	"B"
DRAW THRU	2"+X	X
BLOW THRU	1" MIN.	2.0X

WHERE X = STATIC PRESSURE IN PAN

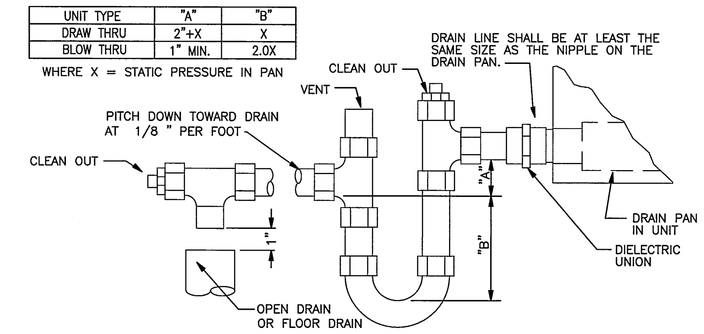

CONDENSATE DRAIN DETAIL (3 / M2.01)

NOT TO SCALE

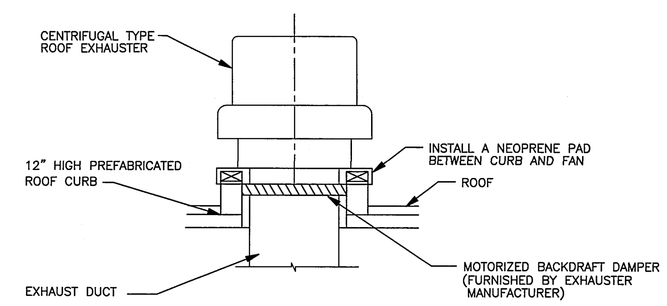

NOTES:

1. CURB & ROOF OPENING DIMENSIONS SHALL BE DETERMINED BY FAN MANUFACTURER.
2. LOCATION & INSTALLATION OF CURB BY CONTRACTOR.
3. RUN ELECTRICAL LINES THRU CLEARANCE HOLE PROVIDED IN DAMPER THEN THRU VENTILATOR ELECTRICAL CONDUIT GUIDE.

ROOF MOUNTED EXHAUST FAN DETAIL (4 / M2.01)

NOT TO SCALE

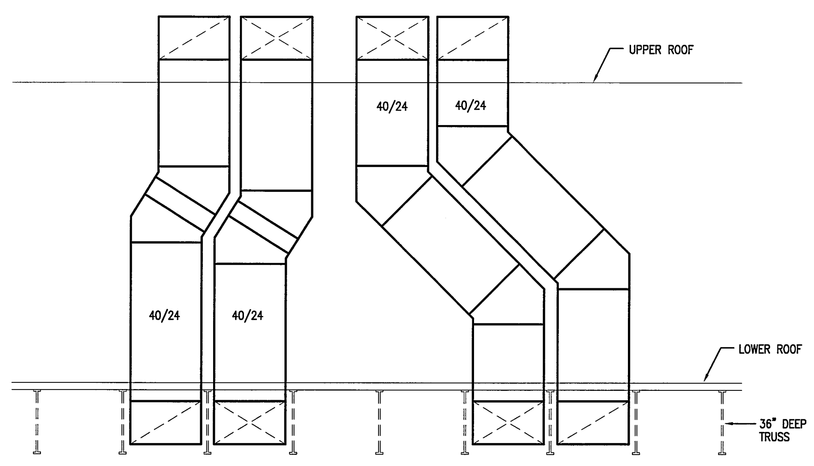

DUCT SECTION @ LOW ROOF AREA (6 / M2.01)

1/4" = 1'-0"

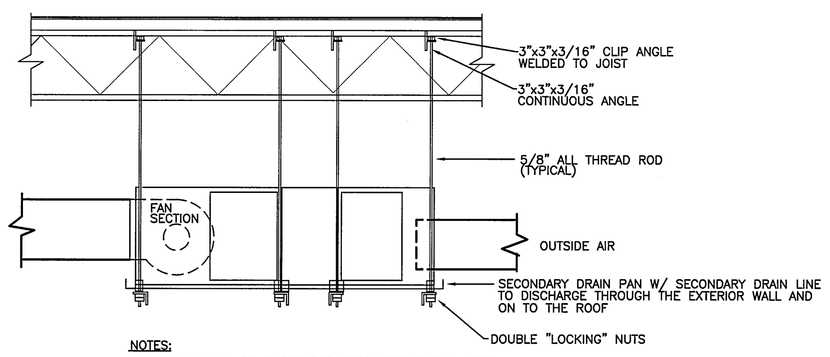

NOTES:

1. UNIT SHALL BE SUSPENDED FROM STRUCTURAL STEEL. COMPLY WITH MANUFACTURER'S INSTALLATION INSTRUCTIONS AND COORDINATE WITH OWNER.
2. UNIT SHALL BE FASTENED TO ANGLE IRON, AS SHOWN.

AHU SUSPENSION DETAIL (7 / M2.01)

NOT TO SCALE

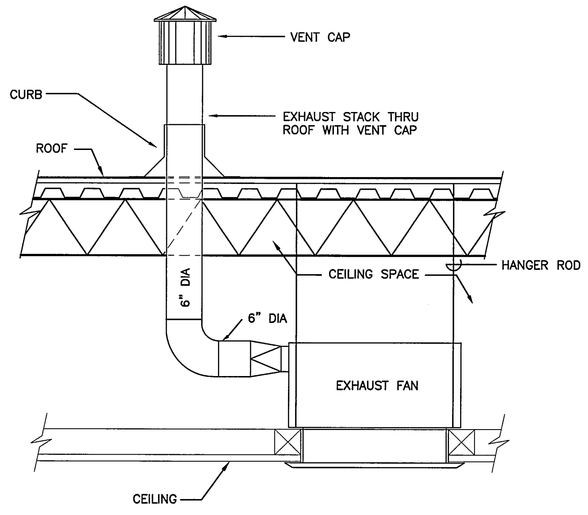

CEILING MOUNTED EXHAUST FAN (5 / M2.01)

NOT TO SCALE

STATE OF TEXAS
LESLIE R. BROWN
60017
LICENSED
PROFESSIONAL ENGINEER
3-7-08

Baird, Hampton & Brown, Inc.
Engineering & Surveying
6300 Ridgeo Pl., Ste. 700 Ft. Worth, TX 76116 Tel (817)338-1277 Fax (817)338-9245 E-Mail:mail@bhbinc.com

BHB PROJECT # 2006.172.000

© Copyright 2007 By Hallum Architects, Inc. - ALL RIGHTS RESERVED

REGISTERED ARCHITECT
HOWARD W. HALLUM
3426
STATE OF TEXAS

Revisions:	By:

HALLUM ARCHITECTS, INC.
6040 CAMP BOWIE BLVD SUITE 17
FORT WORTH, TEXAS 76116
PHONE: 817.332.2422 FAX: 817.338.1949
email: info@hallumarch.com

NEW WORSHIP FACILITY

EAST SIDE CHURCH of CHRIST

MLK @ HWY 183, AUSTIN, TEXAS

MECHANICAL DETAILS AND SECTIONS

Date:	03-07-08
Scale:	PER PLAN
Drawn:	GHM
Job:	2006-05
Sheet Number:	M2.01

AUDITORIUM