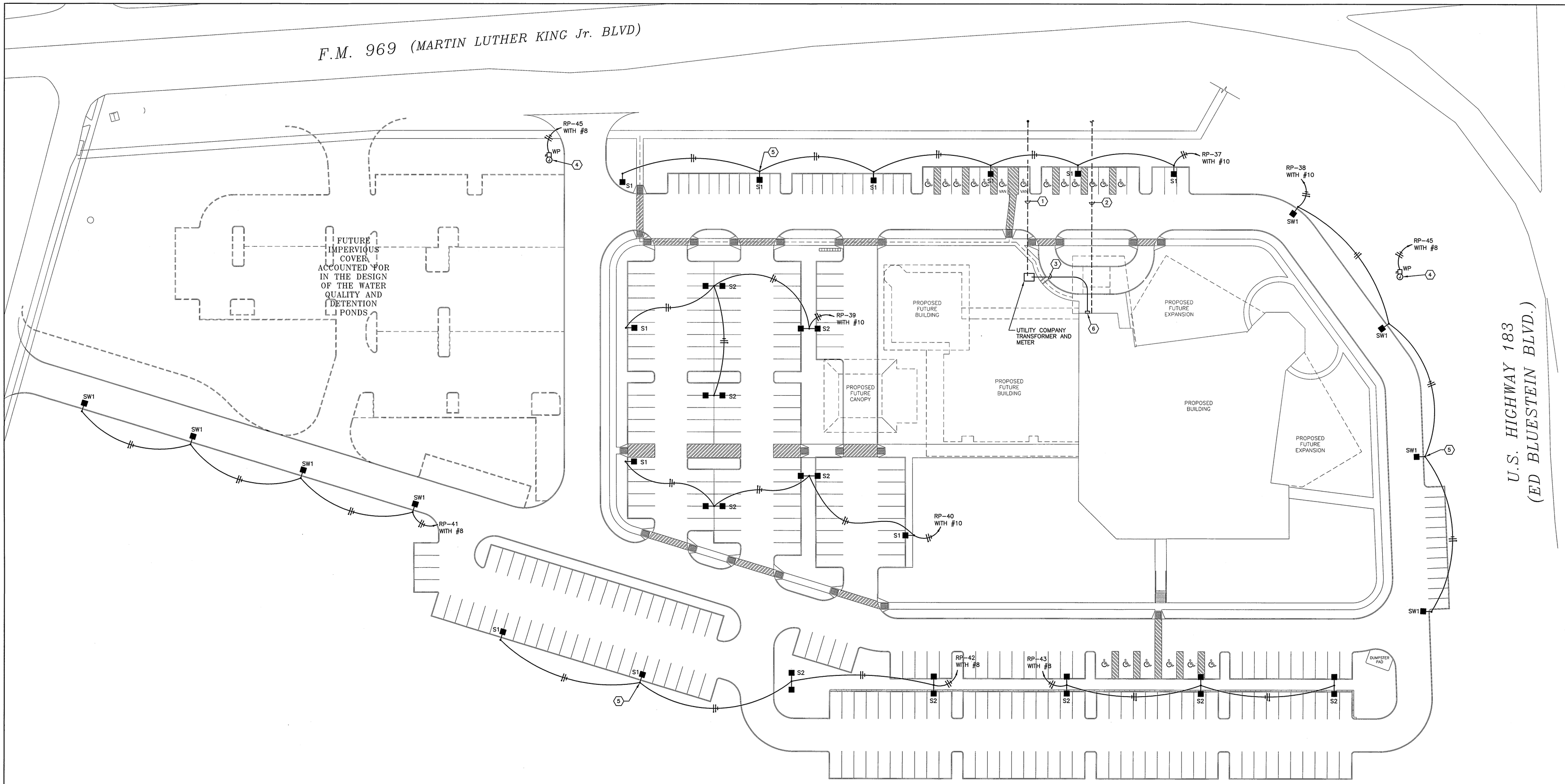

01 ELECTRICAL SITE PLAN
SCALE: 1" = 30' - 0"

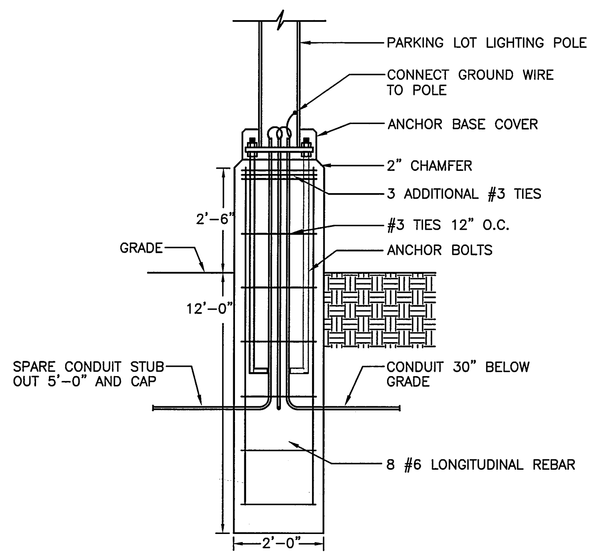

02 POLE BASE DETAIL
SCALE: NOT TO SCALE

LIGHTING FIXTURE SCHEDULE

TYPE	DESCRIPTION	LAMPS
S1	SITE LIGHT, 400W METAL HALIDE, DIE-CAST ALUMINUM HOUSING, SPILL LIGHT ELIMINATOR, GRAPHITE METALLIC FINISH, LISTED FOR WET LOCATION, FULL CUTOFF, DARK SKY COMPLIANT, 8" ARM AND POLE ADAPTOR INCLUDED, 277V LUMARK #MHTR-SL-400-MT-F1-LL-GM. INSTALL ON 30' SQUARE STRAIGHT STEEL POLE WITH GRAPHITE METALLIC FINISH, COOPER LIGHTING #SSS6M30SF.	ONE 400 WATT METAL HALIDE (INCLUDED)
S2	SAME AS TYPE "S1" EXCEPT WITH TWO HEADS PER POLE. COORDINATE ARM BRACKET HOLE PATTERNS WITH MANUFACTURER.	TWO 400 WATT METAL HALIDE (INCLUDED)
SW1	SAME AS TYPE "S1" EXCEPT WITH TYPE III SEGMENTED DISTRIBUTION. LUMARK #MHTR-3S-400-MT-F1-LL-GM.	ONE 400 WATT METAL HALIDE (INCLUDED)

SITE LIGHTING POWER DENSITY CALCULATION

AREA	ALLOWED WATTS PER SQUARE FOOT	WATTAGE	SQUARE FEET	WATTS PER SQUARE FOOT
PARKING LOTS AND DRIVES	0.15	18720 WATTS	185184 SQUARE FEET	0.101 WATTS/SQUARE FOOT

GENERAL NOTES:

1. REFER TO SHEET E3.01 FOR RISER DIAGRAM AND ELECTRICAL SYMBOLS.
2. REFER TO SHEET E3.02 FOR PANELBOARD SCHEDULES AND RELAY PANEL SCHEDULE.
3. BRANCH CIRCUITS SHALL NOT EXCEED A MAXIMUM VOLTAGE DROP OF 3 PERCENT. REFER TO SPECIFCATION SECTION 16120, 2.1, C FOR MINIMUM WIRE SIZES. ALL SITE LIGHTING CIRCUITING SHALL BE #10 OR LARGER REGARDLESS OF DISTANCE.

NOTES BY SYMBOL: " ⬡ "

1. (2) 4" CONDUITS TO PROPERTY LINE AS DIRECTED BY UTILITY COMPANY.
2. (2) 3" CONDUITS TO PROPERTY LINE AS DIRECTED BY TELEPHONE COMPANY.
3. REFER TO RISER DIAGRAM FOR ADDITIONAL INFORMATION.
4. ILLUMINATED SIGN. VERIFY LOCATION WITH ARCHITECT PRIOR TO CONSTRUCTION.
5. INSTALL LIGHT POLE BASE PER DETAIL NO. 02 THIS SHEET – TYPICAL, FOR ALL.
6. EXTERIOR DISCONNECT. REFER TO RISER DIAGRAM FOR ADDITIONAL INFORMATION.

STATE OF TEXAS
MERLIN HAMPTON
38416
LICENSED PROFESSIONAL ENGINEER

Baird, Hampton & Brown, Inc.
Engineering & Surveying
6300 Ridgea PL, Ste. 700 Ft. Worth, TX 76116 Tel (817)338-1277 Fax (817)338-2245 E-Mail:mep@bhbinc.com

BHB PROJECT # 2006.172.000

© Copyright 2007 By Hallum Architects, Inc. - ALL RIGHTS RESERVED

UPDATE SITE LIGHTING

REGISTERED ARCHITECT MARK HALLUM 2458 STATE OF TEXAS

Revisions:	By:

HALLUM ARCHITECTS, INC.
6040 CAMP BOWIE BLVD SUITE 17
FORT WORTH, TEXAS 76116
PHONE: 817.332.2422 FAX: 817.338.1949
email: info@hallumarch.com

NEW WORSHIP FACILITY
EAST SIDE CHURCH of CHRIST
MLK @ HWY 183, AUSTIN, TEXAS

ELECTRICAL SITE PLAN

Date: 03-07-08
Scale: PER PLAN
Drawn: SG
Job: 2006-05
Sheet Number: E 0.01
AUDITORIUM